# DISCOVERY SERIES

## STEEL WOOD STOVES

QUADRA-FIRE®

NOTHING BURNS LIKE A QUAD

QUADRA-FIRE®

# PERFORMANCE
## FROM THE BEGINNING

In 1990, the U.S. Environmental Protection Agency (EPA) enacted stringent wood-burning regulations, crippling the more than 500 wood stove manufacturers around the country. But not Quadra-Fire®.

Two years of research and development later, founders Alan Trusler and Dan Henry unveiled their patented "Quad Burn" system. The technology produced powerful and efficient rolling flames so intense, it dawned the inception of the Quadra-Fire name.

### *WHY QUADRA-FIRE*

For more than 30 years, Quadra-Fire has put performance and easy operation above all else. Today these ideals are vibrant and alive, blending our past with our present. Quadra-Fire products are proudly built to last by our members.

### *WHY WOOD*

IT'S RENEWABLE - Using renewable energy sources is more important than ever and wood is 100 percent renewable. When you burn wood, you are also completing the last step of the natural carbon cycle of trees, resulting in a zero net carbon impact on the environment.

IT'S COST-EFFECTIVE - Heating with wood costs less than heating with electricity, liquid propane or heating oil, especially if you harvest wood yourself.

As the fire ignites, it remains clear:
***NOTHING BURNS LIKE A QUAD***.

***COVER:*** *DISCOVERY II SHOWN WITH CUSTOM TILE*

# QUADRA-FIRE
## DISCOVER THE POSSIBILITIES

With Quadra-Fire, performance comes standard. Building on its strong legacy, Quadra-Fire creates products with:

### PERFORMANCE
Get maximum heat and a clean burn, with the Quadra-Fire Four-Point Burn System delivering performance that you can see.

### CONVENIENT
Save space with a wood storage bin that holds one day's worth of wood.

Personalize your stove by choosing between the tiled or solid side panels. Customize the tile panels with any 12" x 12" ceramic tile, or paint the solid black side panel using high temperature paint.

### EASY OPERATION
Eliminate the hassle and save time with Automatic Combustion Control (ACC): simply load the wood, light the fire and walk away.

## EXCLUSIVE TECHNOLOGIES
Innovative technology is at work in every Quadra-Fire. These advancements make it possible to burn wood more effectively, efficiently, and with more control.

### FOUR-POINT BURN SYSTEM
The patented Quadra-Fire Four-Point Burn System produces intense rolling flames. Four combustion cycles extend the heat, enhance the fire and increase efficiency for long-lasting, proven performance.

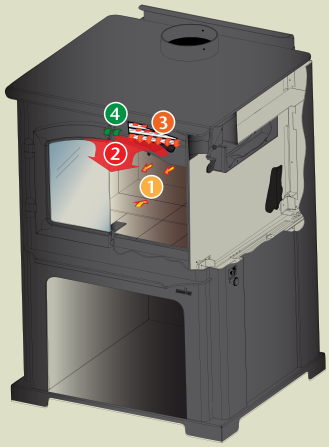


1. **PRECISION START-UP** Airflow quickly routes to the heart of the fire.
2. **SECONDARY BURN ZONE** Air movement helps create rolling flames and keeps the glass clean.
3. **TERTIARY BURN ZONE** Superheated air ignites flammable gases rising from the wood.

**4. QUATERNARY BURN ZONE** Remaining impurities are burned above the baffle before exiting up the chimney.

### AUTOMATIC COMBUSTION CONTROL
Automatic Combustion Control (ACC) is an advanced heat-management technology from Quadra-Fire. ACC feeds the fire with air when it's needed most—for precision start-up and consistent, extended burns.

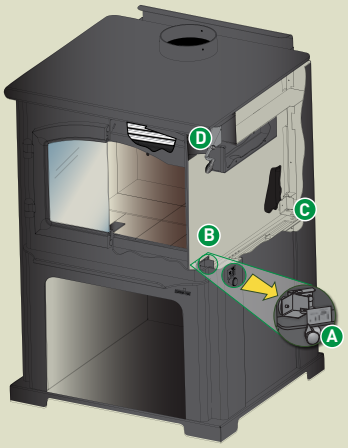


**A. ACTIVATION CONTROL KNOB** Push back and pull forward to activate start-up airflow.

**B. ACC AIR INLET** Controls start-up airflow to build the fire.

**C. ACC TIMER** Opens ACC air inlet during start-up for approximately 20 minutes.

**D. BURN RATE CONTROL** Controls the airflow feeding the fire, also controls your comfort.

# DISCOVERY III

DISCOVERY III SHOWN WITH CUSTOM TILE

| Peak BTU/hr Output[1] | Heating Capacity[2] | Max. Burn Time[3] | Efficiency[5] | Emissions | Firebox | Recommended Log Length | Viewing Area | Actual Weight |
|---|---|---|---|---|---|---|---|---|
| **63,700** | **1,100-3,000 sq ft** | **12 hrs** | **80.2%** | **1.0 g/hr** | **2.3 cu ft** | **18"** | **165 sq in** | **360lb** |

*DISCOVERY III*

Shown above without tile kit or solid side panel.

*PERSONALIZE YOUR STOVE*

Use any 11-3/4" x 11-3/4" x 3/8" ceramic tile, available at any tile and flooring retailer, or use the solid side panel, which can be painted using a high temperature paint.

# DISCOVERY II

DISCOVERY II SHOWN WITH CUSTOM PAINTED SOLID SIDE PANEL

| Peak BTU/hr Output[1] | Heating Capacity[2] | Max. Burn Time[3] | Efficiency[5] | Emissions | Firebox | Recommended Log Length | Viewing Area | Actual Weight |
|---|---|---|---|---|---|---|---|---|
| 51,000 | 1,000-2,600 sq ft | 10 hrs | 78.3% | 1.9 g/hr | 2.0 cu ft | 16" | 165 sq in | 339lb |

*DISCOVERY II*

Shown above without tile kit or solid side panel.

*PERSONALIZE YOUR STOVE*

Use any 11-3/4" x 11-3/4" x 3/8" ceramic tile, available at any tile and flooring retailer, or use the solid side panel, which can be painted using a high temperature paint.

# DISCOVERY I

DISCOVER I SHOWN WITH CUSTOM TILE

| Peak BTU/hr Output[1] | Heating Capacity[2] | Max. Burn Time[3] | Efficiency5 | Emissions | Firebox | Recommended Log Length | Viewing Area | Actual Weight |
|---|---|---|---|---|---|---|---|---|
| **44,000** | **800-2,100 sq ft** | **7 hrs** | **78.7%** | **2.1 g/hr** | **1.4 cu ft** | **16"** | **125 sq in** | **285lb** |

*DISCOVERY I*

Shown above without tile kit or solid side panel.

*PERSONALIZE YOUR STOVE*

Use any 11-3/4" x 11-3/4" x 3/8" ceramic tile, available at any tile and flooring retailer, or use the solid side panel, which can be painted using a high temperature paint.

## ACCESSORIES

*FAN KIT*
ALL STOVES

## PERSONALIZE YOUR STOVE

*TILE PANELS (DISCOVERY III AND II USE THREE TILES PER SIDE. DISCOVERY I USES TWO TILES PER SIDE)*

*SOLID PANELS CUSTOMIZE YOUR STOVE BY PAINTING THE SIDE PANELS WITH HIGH TEMPERATURE PAINT (RATED ABOVE 300 DEGREES)*

## STOVE COMPARISON

| DISCOVERY III | DISCOVERY II | DISCOVERY I |
|---|---|---|
| 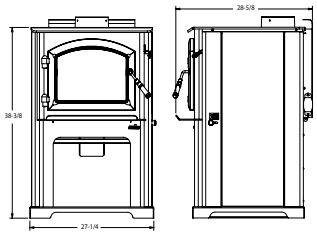 | 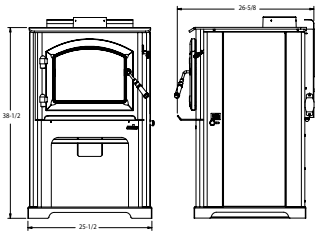 | 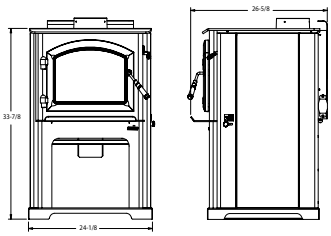 |
| ***PEAK BTU/HR OUTPUT[1]*** » 63,700 | ***PEAK BTU/HR OUTPUT[1]*** » 51,000 | ***PEAK BTU/HR OUTPUT[1]*** » 44,000 |
| ***HEATING CAPACITY[2]*** » 1,100 - 3,000 sq. ft. | ***HEATING CAPACITY[2]*** » 1,000 - 2,600 sq. ft. | ***HEATING CAPACITY[2]*** » 800 - 2,100 sq. ft. |
| ***MAXIMUM BURN TIME[3]*** » 12 hrs | ***MAXIMUM BURN TIME[3]*** » 10 hrs | ***MAXIMUM BURN TIME[3]*** » 7 hrs |
| ***EFFICIENCY[5]*** » 80.2% | ***EFFICIENCY[5]*** » 78.3% | ***EFFICIENCY[5]*** » 78.7% |
| ***EMISSIONS*** » 1.0 g/hr | ***EMISSIONS*** » 1.9 g/hr | ***EMISSIONS*** » 2.1 g/hr |
| ***FIREBOX CAPACITY*** » 2.3 cu ft | ***FIREBOX CAPACITY*** » 2.0 cu ft | ***FIREBOX CAPACITY*** » 1.4 cu ft |
| ***RECOMMENDED LOG LENGTH*** » 18" max. | ***RECOMMENDED LOG LENGTH*** » 16" max. | ***RECOMMENDED LOG LENGTH*** » 16" max. |
| ***VIEWING AREA*** » 165 sq in | ***VIEWING AREA*** » 165 sq in | ***VIEWING AREA*** » 125 sq in |
| ***ACTUAL WEIGHT*** » 360lb | ***ACTUAL WEIGHT*** » 339lb | ***ACTUAL WEIGHT*** » 285lb |

## CLEARANCES TO COMBUSTIBLES

| DISCOVERY SERIES | | A | B | C | D | E | F | G |
|---|---|---|---|---|---|---|---|---|
| Discovery III | Single Wall Pipe | 18-1/2" | 11-3/4" | 27-1/2" | 14-1/2" | 10" | 22-5/8" | 53-1/2" |
| | Double Wall Pipe | 12" | 5-1/4" | 27-1/2" | 14-1/2" | 10" | 22-5/8" | 53-1/2" |
| Discovery II | Single Wall Pipe | 18-1/4" | 11-3/4" | 28-1/2" | 16" | 8" | 20" | 48" |
| | Double Wall Pipe | 13-1/2" | 6-1/2" | 25" | 13" | 6-1/2" | 18-1/2" | 48" |
| Discovery I | Single Wall Pipe | 18" | 11" | 24-1/2" | 13" | 8-1/2" | 20" | 56" |
| | Double Wall Pipe | 11-3/4" | 5-3/4" | 23" | 10-1/2" | 7-1/2" | 19" | 43" |

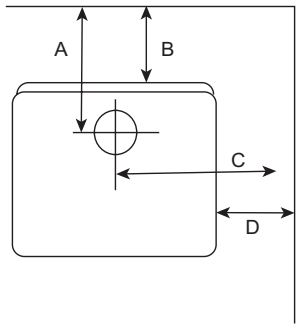


**Backwall / Sidewall**

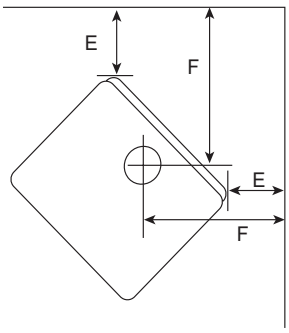


**Corner Installation**

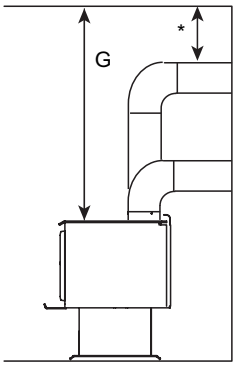


**Stove to Ceiling Clearance**

*Follow pipe manufacturer's clearances as required

## HEARTH PROTECTION

| | Hearthpad Type | A | B | C | D | E | F | G | H | I | J | K | L |
|---|---|---|---|---|---|---|---|---|---|---|---|---|---|
| Discovery III | Type I | 8" | 16" | 15-5/8" | 41" | 31-5/8" | 52-1/4" | 15-1/8" | 41-1/4" | 66-1/8" | 52-1/4" | 41-1/4" | 66-1/8" |
| Discovery II | Type I | 8" | 16" | 15-5/8" | 39" | 31-5/8" | 47-1/8" | 15-5/8" | 36" | 58-3/4" | 48-5/8" | 37-1/2" | 60-7/8" |
| Discovery I | Type I | 8" | 16" | 13-5/8" | 39" | 29-5/8" | 46-3/4" | 13-5/8" | 37-1/8" | 59-1/4" | 47-3/4" | 38-1/8" | 60-5/8" |

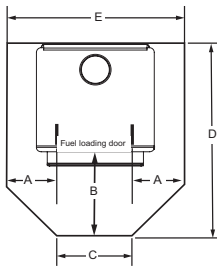


**Standard Dimensions**

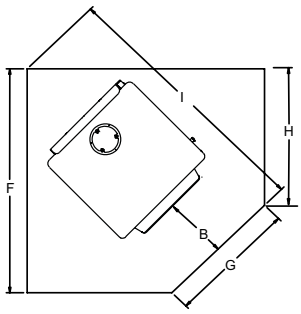


**Corner Dimensions w/Double Wall Pipe**

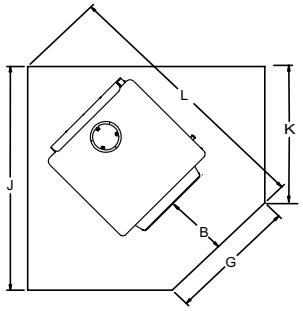


**Corner Dimensions w/Single Wall Pipe**

**Thank you** from everyone at Quadra-Fire

Available From:

QUADRA-FIRE®

NOTHING BURNS LIKE A QUAD

www.quadrafire.com | 800-926-4356

**Limited Lifetime Warranty[4]**

The strongest in the industry, Quadra-Fire provides a limited lifetime warranty on the most important aspects: firebox and heat exchanger.

facebook.com/QuadraFire

twitter.com/QuadraFire

youtube.com/QuadraFirePower

**1:** BTU: First hour output uses high burn efficiency number. BTU will vary depending on the type of fuel used and moisture content of the fuel. **2:** Heating capacity (in square feet) is a guideline only and may differ due to climate, building construction and condition, amount and quality of insulation, location of the heater, and air movement in the room. **3:** Actual burn times will vary based on how the appliance is operated, load size, moisture content and type of wood used, chimney height and installation **4:** For full warranty details go to www.quadrafire.com. **5:** Weighted average LHV (low heating value) efficency.

IMPORTANT - READ BEFORE YOU INSTALL! - Refer to the Owner/Installation Manual for complete clearance requirements and specifications. The images and descriptions in this brochure are provided to assist you in product selection only.

Quadra-Fire is a registered trademark of Hearth & Home Technologies. Product specifications and pricing subject to change without notice.

Fireplace, stove and insert surfaces get extremely HOT and can cause burns if touched. Keep a safe distance away. To learn more visit www.quadrafire.com/fireplacesafety

QDF-1066U-0318