CLIP TOP 107 DEGREE HINGE

Features

- 107 ˚ opening angle
- 3-dimensional adjustment
- All metal hinge, nickel plated
- Available with INSERTA tool-free attachment
- 86 ˚angle restriction clips available

Minimum Reveal

Minimum reveal table					
0.6	1.0	1.3	1.7	2.5	3
0.6	1.0	1.3	1.6	2.4	4
0.6	1.0	1.2	1.5	2.2	5
0.6	1.0	1.2	1.4	2.0	6
16	18	19	20	22	B
T Door thickness					Bore

Cross-refer - ence the door thickness and bore distance to assure that doors won't bind when opened.

For door thickness greater than 22mm trial application recommended or use Thick door hinge

Frame cabinet applications

Overlay door

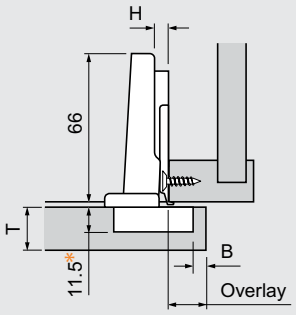

Partial overlay door

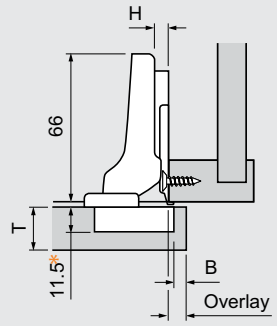

Inset door

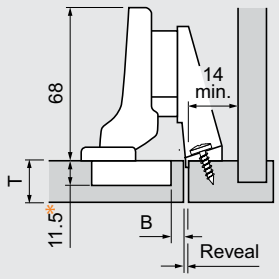

NOTE: For this application use a half-cranked hinge from above and mounting plate 175H5030.21

Panel cabinet applications

Overlay door

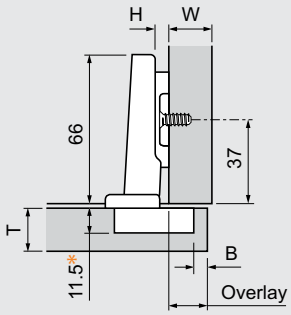

Twin overlay doors

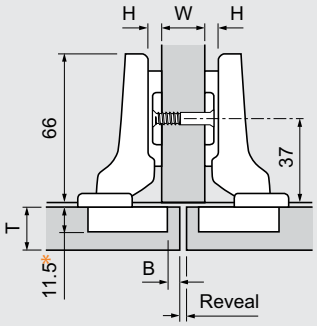

Inset door

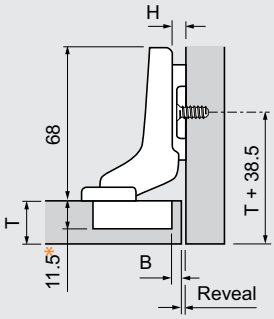

Straight-arm hinges

	Self close	Free swing
Screw-on	75T1550	74T1550
Press-in 10	75T1580	74T1580
INSERTA	75T1590B	74T1590B

	Overlay table					
0	14	15	16	17	10	?1
3	11	12	13	14	13	24
4.5	9.5	10.5	11.5	12.5	14.5	25.5
6	8	9	10	11	16	?7
9	5	6	7	8	19	?0
H Plate	3	4	5	6	P	S
	B Bore distance				Clearances	

11 fixed distance

NOTE: 4.5 plate only available for face frame, 9 plate only available for panel cabinets

Half-cranked hinges (9.5 mm)

	Self close
Screw-on	75T1650
Press-in 10	75T1680
INSERTA	75T1690B

	Overlay table				Partial overlay	
0	4.5	5.5	6.5	7.5	20	31
H Plate	3	4	5	6	P	S
	B Bore distance				Clearances	

1.5 fixed distance

	Reveal table				Twin overlay		
0	7	5	3	1	16	20	31
	10	8	6	4	19		
	13	11	9	7	22		
H Plate	3	4	5	6	W	P	S
	B Bore distance				Panel	Clearances	

Full-cranked hinges (18mm)

	Self close
Screw-on	75T1750
Press-in 10	75T1780
INSERTA	75T1790B

	Reveal table					
0	4	3	2	1	29	40
H Plate	3	4	5	6	P	S
	B Bore distance				Clearances	

- 7 fixed distance

KELLEY,S CABINET SUPPLY, INC.
1019 NORTH COMBEE ROAD
LAKELAND, FL. 33801

(800) 282-3653

KELLEY.S CABINET SUPPLY, INC.
3315 SW 13 ST. UNIT #6
OCALA, FL. 34474

BLUM 120 DEGREE HINGE

Features

- 120˚ opening angle
- 3-dimensional adjustment
- All metal hinge, nickel plated
- Available with INSERTA tool-free attachment

Minimum Reveal

Minimum reveal table					
1.2	1.7	2.0	2.4	3.3	3
1.2	1.7	2.0	2.3	3.1	4
1.1	1.6	1.9	2.2	3.0	5
1.1	1.6	1.9	2.2	2.9	6
16	18	19	20	22	B
T Door thickness					Bore

Cross-refer - ence the door thickness and bore distance to assure that doors won't bind when opened.

For door thickness greater than 22mm trial application recommended or use Thick door hinge (page 18).

Frame cabinet applications

Overlay door

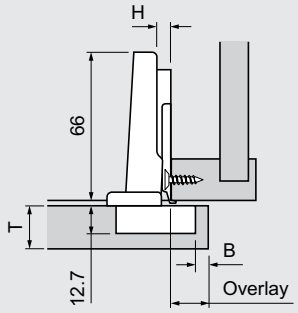

Partial overlay door

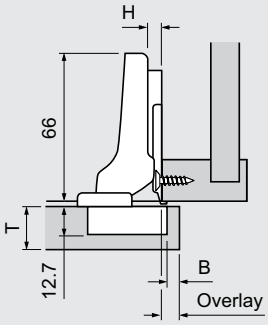

Inset door

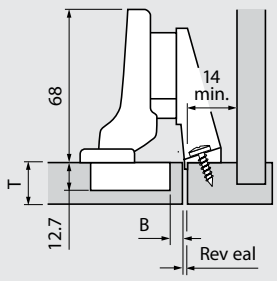

NOTE: For this application use a half-cranked hinge and mounting plate 175H5030.21

Panel cabinet applications

Overlay door

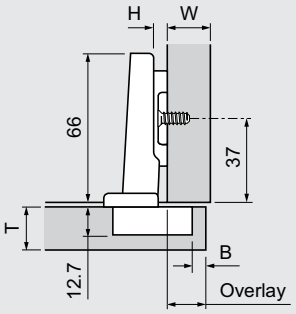

Twin overlay doors

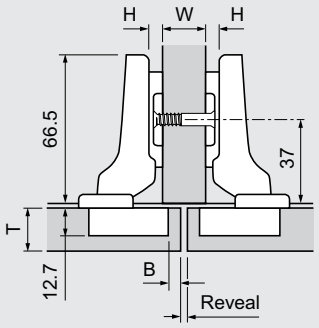

Inset door

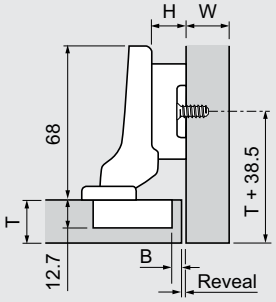

Straight-arm hinges

	Self close	Free swing
Screw-on	71T5550	70T5550
Press-in 10	71T5580	70T5580
Expando	71T558E	
INSERTA	71T5590B	70T5590B

Overlay table						
0	14	15	16	17	11.5	20.5
3	11	12	13	14	14.5	23.5
4.5	9.5	10.5	11.5	12.5	16	25
6	8	9	10	11	17.5	26.5
9	5	6	7	8	20.5	29.5
H Plate	3	4	5	6	P	S
	B Bore distance				Clearance	

11 fixed distance

NOTE: 4.5 plate only available for face frame, 9 plate only available for panel cabinets

Half-cranked hinges (9.5 mm)

	Self close	Free swing
Screw-on	71T5650	70T5650
Press-in 10	71T5680	70T5680
INSERTA	71T5690B	70T5690B

Overlay table					Partial overlay	
0	4.5	5.5	6.5	7.5	21.5	30
H Plate	3	4	5	6	P	S
	B Bore distance				Clearances	

1. 5 fixed distance

Reveal table					Twin overlay		
0	7	5	3	1	16	21.5	30
	10	8	6	4	19		
	13	11	9	7	22		
H Plate	3	4	5	6	W	P	S
	B Bore distance					Clearances	

Half-cranked hinges (9.5 mm)

	Self close	Free swing
Screw-on	71T5650	70T5650
Press-in 10	71T5680	70T5680
INSERTA	71T5690B	70T5690B

Reveal table						
9	4.5	3.5	2.5	1.5	30.5	39
H Plate	3	4	5	6	P	S
	B Bore distance				Clearances	

-7.5 fixed distance

KELLEY,S CABINET SUPPLY, INC.
1019 NORTH COMBEE ROAD
LAKELAND, FL. 33801

(800) 282-3653

KELLEY.S CABINET SUPPLY, INC.
3315 SW 13 ST. UNIT #6
OCALA, FL. 34474

BLUM 120 + DEGREE HINGE

Features

- 120˚ opening angle
- For larger overlays (max. 21mm)
- 3-dimensional adjustment
- All metal hinge, nickel plated
- Available with INSERTA tool-free attachment

Minimum Reveal

Minimum reveal table					
1.2	1.7	2.0	2.4	3.3	3
1.2	1.7	2.0	2.3	3.1	4
1.1	1.6	1.9	2.2	3.0	5
1.1	1.6	1.9	2.2	2.9	6
16	18	19	20	22	B
T Door thickness					Bore

Cross-reference the door thickness and bore distance to assure that doors won't bind when opened.

For door thickness greater than 22mm trial application recommended or use Thick door hinge

Frame cabinet applications

Overlay door

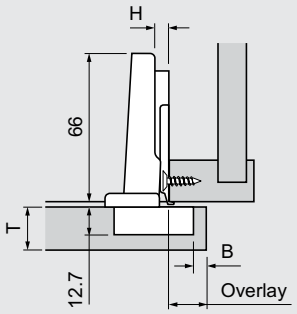

Panel cabinet applications

Overlay door

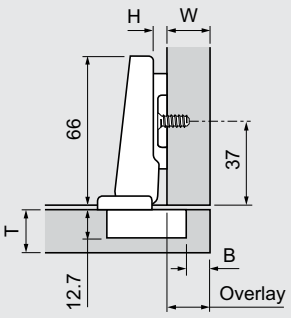

Straight-arm hinges

	Self close	Free swing
Screw-on	73T5550	72T5550
Press-in (10)	73T5580	72T5580
Expando	73T558E	-
INSERTA	73T5590B	72T5590B

Overlay table						
0	16	17	18	19	9.5	19
3	13	14	15	16	12.5	22
4.5	11.5	12.5	13.5	14.5	14	23.5
6	10	11	12	13	15.5	25
9	7	8	9	10	18.5	28
H Plate	3	4	5	6	P	S
	B Bore distance				Clearance	

13 fixed distance

NOTE:
4.5 plate only available for face frame, 9 plate only available for panel cabinets

Twin overlay doors

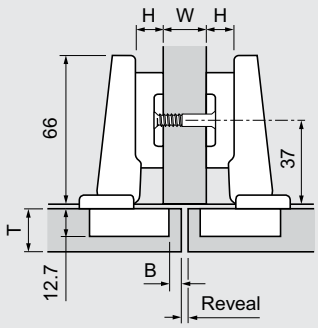

Straight-arm hinges

	Self close	Free swing
Screw-on	73T5550	72T5550
Press-in (10)	73T5580	72T5580
Expando	73T558E	-
INSERTA	73T5590B	72T5590B

	Reveal table				Twin overlay		
9	2	-	-	-	16	18.5	28
	5	3	-	-	19		
	8	6	4	-	22		
H Plate	3	4	5	6	W	P	S
	B Bore distance					Clearances	

4 fixed distance

Building both frame and panel cabinets

Frame

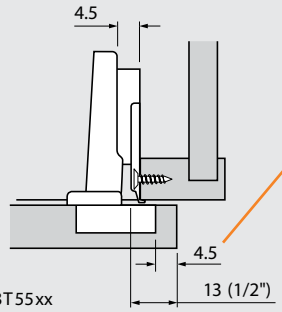

Hinge: 7 3T55xx
Plate: 175h6040

Panel

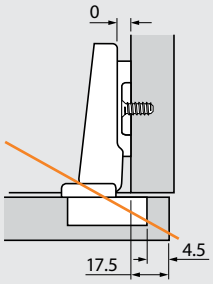

Hinge: 73T55 xx
Plate: any 0 plate

The most common overlays for frame and panel cabinets can be achieved by using the same machine setting for hinge cup boring.

Bore ALL doors at 4.5mm to achieve:
- 13mm (1/2") overlay on frame cabinets and
- 17. 5mm overlay on panel cabinets

Use hinge/plate combinations to the left.

Advantages:
- Only one machine setting for boring all doors (4.5mm)
- Same hinge used for both applications (7 3T55xx)

KELLEY,S CABINET SUPPLY, INC.
1019 NORTH COMBEE ROAD
LAKELAND, FL. 33801

(800) 282-3653

KELLEY.S CABINET SUPPLY, INC.
3315 SW 13 ST. UNIT #6
OCALA, FL. 34474

BLUM 170 DEGREE HINGE

Features

- 170 ˚ opening angle
- 3-dimensional adjustment
- All metal hinge, nickel plated
- Available with INSERTA t ool-free attachment
- 170˚angle restriction clips are available

Minimum Reveal

Minimum reveal table						
0	0	0	0	0.2	2.2	3
0	0	0	0	0	1.4	4
0	0	0	0	0	0.9	5
0	0	0	0	0	0	6
0	0	0	0	0	0	7
0	0	0	0	0	0	8
16	18	19	20	22	24	B
T Door thickness						Bore

Cross-refer - ence the door thickness and bore distance to assure that doors won't bind when opened.

Frame cabinet applications

Overlay door

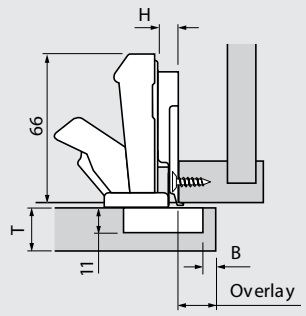

NOTE: 17⊠H6xxx or 17 ⊠L6600. ⊠⊠ recommended

Partial overlay door

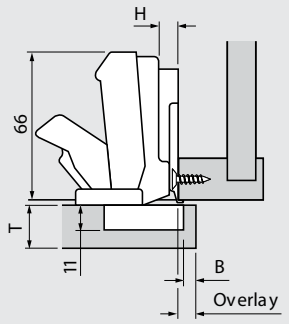

NOTE: 175H6xxx or 175L6600.24 recommended

NOTE: Inset application not recom - mended for 170 hinges and face frame adapters

Panel cabinet applications

Overlay door

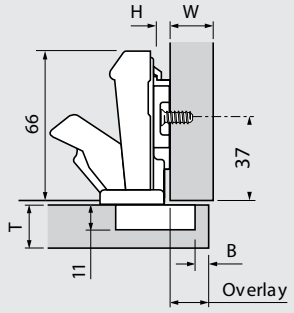

Twin overlay doors

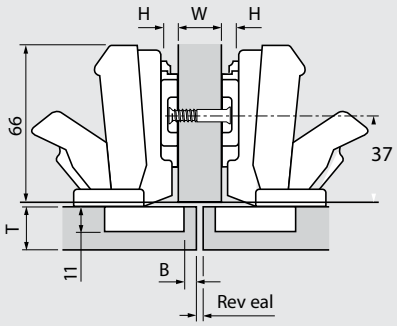

Inset door

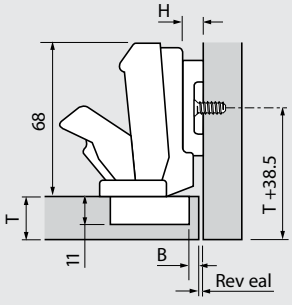

Straight-arm hinges

	Self close	Free swing
Screw-on	71T6550	70T6550
Press-in	71T6580	70T6580
INSERTA	71T6540B	70T6540B

	Overlay table							
0	14	15	16	17	18	19	1.5	65
3	11	12	13	14	15	16	4.5	68
4.5	9.5	10.5	11.5	12.5	13.5	14.5	6	69.5
6	8	9	10	11	12	13	7.5	71
9	⊠	6	7	8	9	10	10.5	74
H Plate	3	4	5	6	7	8	P Clearances	S Clearances
	B Bore distance							

11 fixed distance

NOTE: 4.5 plate only available for face frame, 9 plate only available for panel cabinets

Half-cranked hinges (9. 5mm)

	Self close	Free swing
Screw-on	71T6650	70T6650
Press-in	71T6680	70T6680
INSERTA	71T6640B	

	Reveal table						Twin overlay		
0	7	5	3	1	-	-	16	11	75
	10	8	6	4	2	0	19		
	13	11	9	7	5	3	22		
H Plate	3	4	5	6	7	8	W Panel	P Clearances	S Clearances
	B Bore distance								

Half-cranked hinges (9. 5mm)

	Self close	Free swing
Screw-on	71T6650	70T6650
Press-in	71T6680	70T6680
INSERTA	71T6640B	

	Reveal table							
9	4.5	3.5	2.5	1 .5	0.5	-	20	84
H Plate	3	4	5	6	7	8	P Clearances	S Clearances
	B Bore distance							

- 7.5 fixed distance

KELLEY,S CABINET SUPPLY, INC.
1019 NORTH COMBEE ROAD
LAKELAND, FL. 33801

(800) 282-3653

KELLEY.S CABINET SUPPLY, INC.
3315 SW 13 ST. UNIT #6
OCALA, FL. 34474

CLIP TOP 170 SPECIAL APPLICATIONS

Applications

Thick door application

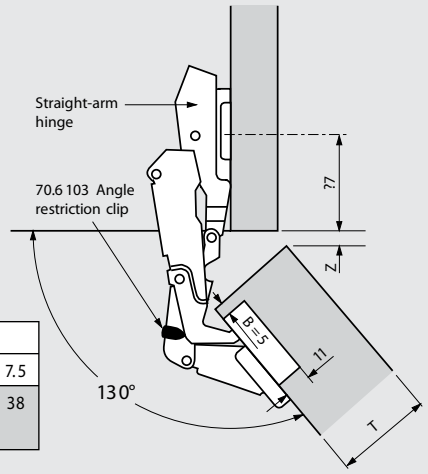

Z Gap				
15.5	13	11	9. 5	7.5
25	29	32	35	38
T Door thickness				

Note: Be aware of door weight

Trial application recommended

Thick door - twin application

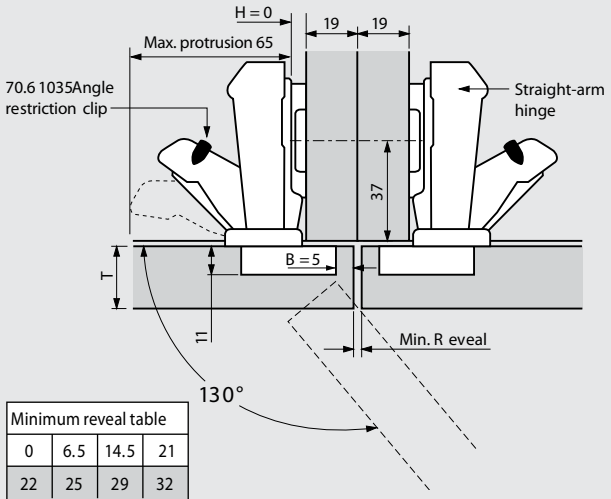

Minimum reveal table			
0	6.5	14.5	21
22	25	29	32
T Door thickness			

Trial application recommended

Lip door application

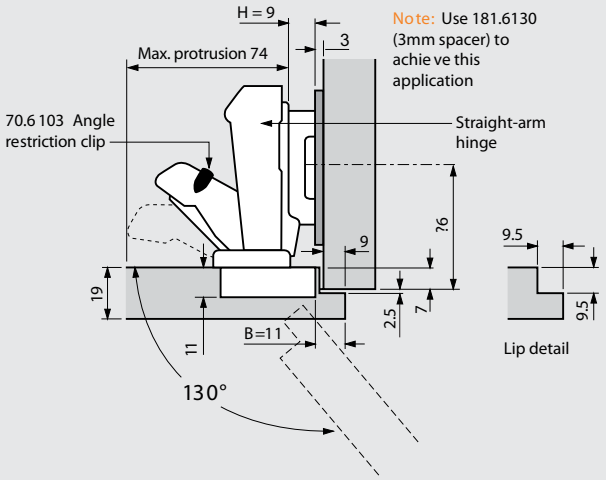

Trial application recommended

Mitered corner door application

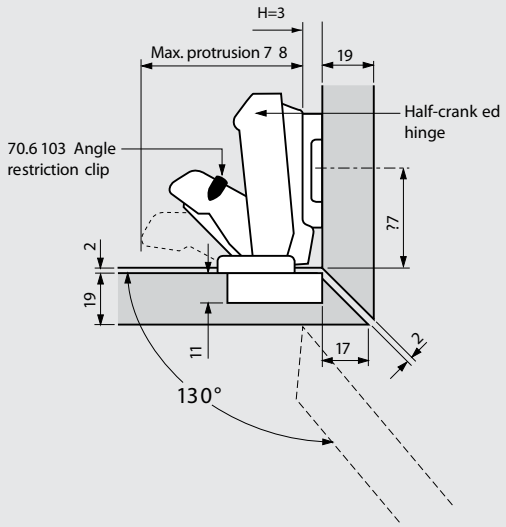

Trial application recommended

Angle restriction clip

- Reduces opening angle of the CLIP top and CLIP 170° to 130 °
- Black nylon

Angle restriction clip 70.6103

3mm spacer

- Mounts under CLIP plates
- Reduces overlay by 3mm
- Brown nylon

3mm spacer 181.6130

KELLEY,S CABINET SUPPLY, INC.
1019 NORTH COMBEE ROAD
LAKELAND, FL. 33801

(800) 282-3653

KELLEY.S CABINET SUPPLY, INC.
3315 SW 13 ST. UNIT #6
OCALA, FL. 34474

CLIP TOP INSET BLIND CORNER HINGE

Features

- 95˚ opening angle
- 3-dimensional adjustment
- All metal hinge, nickel plated
- Available with INSERTA tool-free attachment

Minimum Reveal

Minimum reveal table						
0.1	0.3	0.4	0.5	0.9	1.3	3
0.1	0.3	0.4	0.5	0.9	1.3	4
0.1	0.4	0.4	0.5	0.9	1.3	5
0.1	0.3	0.4	0.4	0.9	1.2	6
0.1	0.3	0.4	0.5	0.9	1.2	7
16	18	19	20	22	24	B
T Door thickness						Bore

Cross-refer - ence the door thickness and bore distance to assure that doors won't bind when opened.

Flush door applications

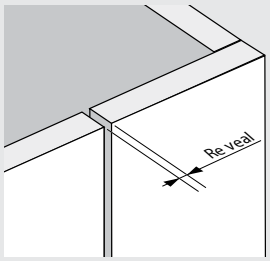

Back of door is flush with stationary panel

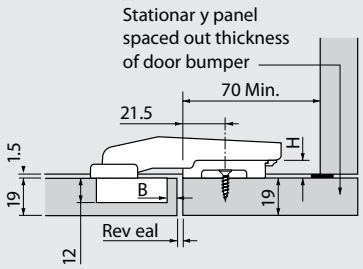

Inset blind corner hinges

	Self close
Screw-on	79T9550
Press-in 19	79T9580
INSERTA	79T9590B

	Reveal table							
3	5	4	3	2	1		33.5	21
H Plate	3	4	5	6	7	B Bore distance	P	S Clearances

Offset door applications

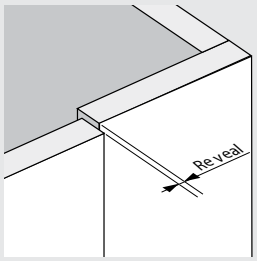

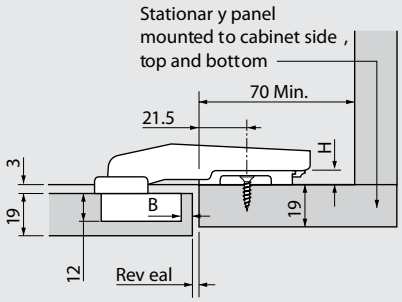

Inset blind corner hinges

	Self close
Screw-on	79T9550
Press-in 19	79T9580
INSERTA	79T9590B

	Reveal table							
0	5	4	3	2	1		33.5	18
H Plate	3	4	5	6	7	B Bore distance	P	S Clearances

Adjustments and clearances

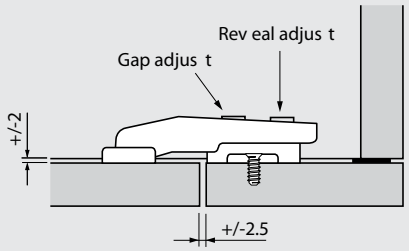

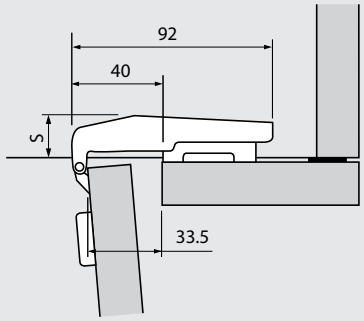

KELLEY,S CABINET SUPPLY, INC.
1019 NORTH COMBEE ROAD
LAKELAND, FL. 33801

(800) 282-3653

KELLEY.S CABINET SUPPLY, INC.
3315 SW 13 ST. UNIT #6
OCALA, FL. 34474

CLIP TOP 95 DEGREE THICK DOOR HINGE

Features

- 95° opening angle
- 3-dimensional adjustment
- All metal hinge, nickel plated
- Available with INSERTA tool-free attachment

Minimum Reveal

Minimum reveal table							
0.4	0.9	1.3	1.8	2.6	3.1	3.8	3
0.4	0.9	1.3	1.8	2.5	2.9	3.5	4
0.4	0.9	1.3	1.8	2.4	2.8	3.3	5
0.4	0.9	1.3	1.8	2.3	2.7	3.2	6
0.4	0.9	1.2	1.7	2.2	2.6	3.1	7
19	22	24	26	28	29	30	B
T Door thickness							Bore

Cross-refer - ence the door thickness and bore distance to assure that doors won't bind when opened.

CLIP top/CLIP

Frame cabinet applications

Overlay door

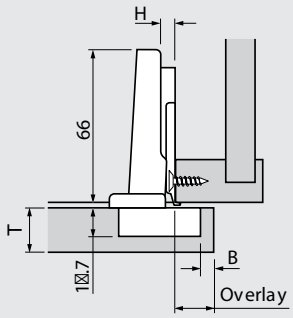

Partial overlay door

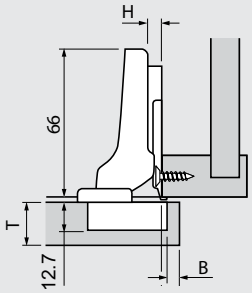

Inset door

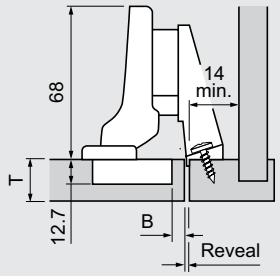

NOTE: For this application use a half-cranked hinge from above and mounting plate 175H5030.21

Panel cabinet applications

Overlay door

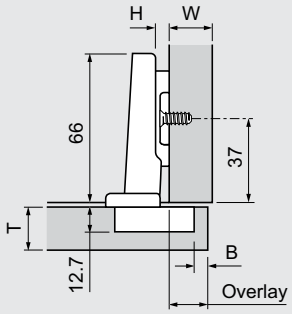

Twin overlay doors

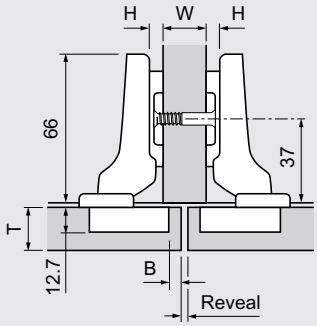

Inset door

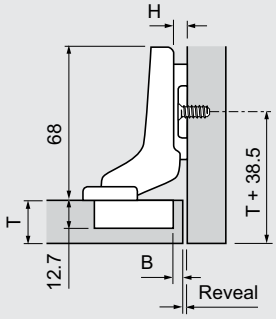

Straight-arm hinges

	Self close	Free swing
Screw-on	71T9550	70T9550
Press-in 11	71T9580	70T9580
INSERTA	71T9590B	-

Overlay table							
0	14	15	16	17	18	14.5	22
3	11	12	13	14	15	17.5	25
4.5	9.5	10.5	11.5	12.5	13.5	19	26.5
6	8	9	10	11	12	20.5	28
9	5	6	7	8	9	23.5	31
H Plate	3	4	5	6	7	P Clearances	S
	B Bore distance						

11 fixed distance

NOTE: 4.5 plate only available for face frame, 9 plate only available for panel cabinets

Half-cranked hinges (9. 5mm)

	Self close	Free swing
Screw-on	71T9650	70T9650
Press-in 11	71T9680	
INSERTA	71T9690B	

Overlay table						Partial overlay	
0	4.5	5.5	6.5	7.5	8.5	24	31
H Plate	3	4	5	6	7	P Clearances	S
	B Bore distance						

1.5 fixed distance

Reveal table						Twin overlay		
0	7	5	3	1	-	16	24	31
	10	8	6	4	2	19		
	13	11	9	7	5	22		
H Plate	3	4	5	6	7	W Panel	P Clearances	S
	B Bore distance							

Full-cranked hinges (18mm)

	Self close	Free swing
Screw-on	71T9750	70T9750
Press-in 11	71T9780	
INSERTA	71T9790B	

Reveal table							
0	4	3	2	1	-	32.5	40
H Plate	3	4	5	6	7	P Clearances	S
	B Bore distance						

- 7 fixed distance

KELLEY,S CABINET SUPPLY, INC.
1019 NORTH COMBEE ROAD
LAKELAND, FL. 33801

(800) 282-3653

KELLEY.S CABINET SUPPLY, INC.
3315 SW 13 ST. UNIT #6
OCALA, FL. 34474

CLIP TOP ZERO PROTRUSION HINGE

Features

- 155˚ opening angle
- 3-dimensional adjustment
- All metal hinge, nickel plated
- Available with INSERTA tool-free attachment
- For cabinets with interior drawers

Minimum Reveal

Minimum reveal table						
0	0	0	0	0	0	3
0	0	0	0	0	0	4
0	0	0	0	0	0	5
0	0	0	0	0	0	6
16	18	19	20	22	24	B
T Door thickness						Bore

No minimum reveal required for door thicknesses of up to 24mm

Frame cabinet applications

Overlay door

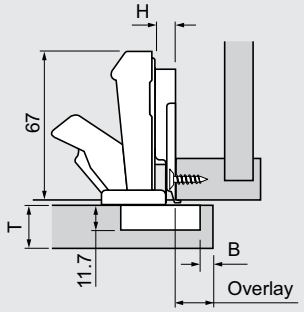

NOTE: 175H6xxx or 175L6600.24 recommended

Panel cabinet applications

Overlay door

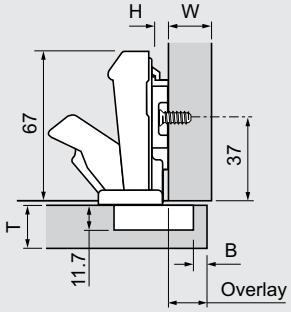

Straight-arm hinges

	Self close
Screw-on	71T7500B
Press-in 22	71T7530B
INSERTA	71T7540B

	Overlay table					
0	14	15	16	17	-2.3	56
3	11	12	13	14	.7	56
H	3	4	5	6	P	S
Plate	B Bore distance				Clearances	

11 fixed distance

Door protrusion

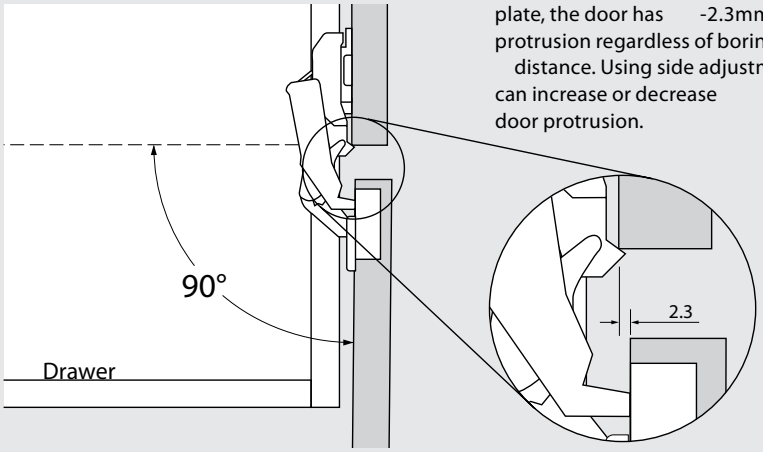

NOTE: At 90˚ opening, using a 0mm plate, the door has -2.3mm protrusion regardless of boring distance. Using side adjustment can increase or decrease door protrusion.

KELLEY,S CABINET SUPPLY, INC.
1019 NORTH COMBEE ROAD
LAKELAND, FL. 33801

(800) 282-3653

KELLEY.S CABINET SUPPLY, INC.
3315 SW 13 ST. UNIT #6
OCALA, FL. 34474

CLIP TOP DIAGONAL 45 DEGREE HINGE

Features

- 110 ° opening angle
- 3-dimensional adjustment
- All metal hinge, nickel plated
- Available with INSERTA tool-free attachment

Applications

Overlay application

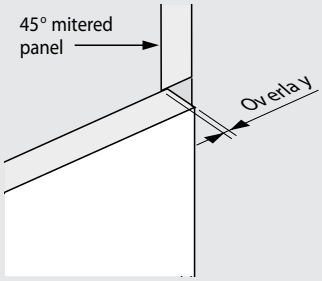

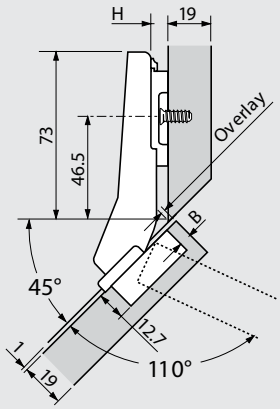

Diagonal 45 hinges	Self close
Screw-on	79T5550
Press-in 21	79T5580
INSERTA	79T5590B

	Overlay table			
0	1	2	3	4
H Plate	3	4	5	6
	B Bore distance			

Inside corner

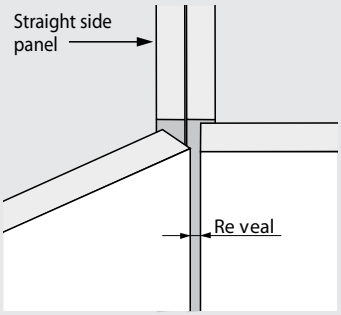

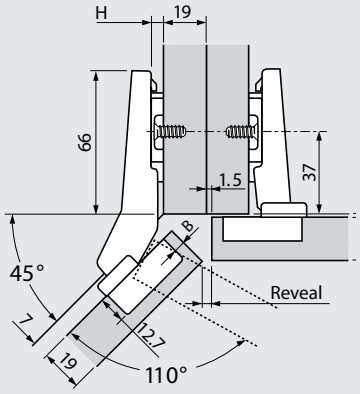

Diagonal 45 hinges	Self close
Screw-on	79T5550
Press-in 21	79T5580
INSERTA	79T5590B

	Reveal table			
0	6	5	4	3
H Plate	3	4	5	6
	B Bore distance			

NOTE: Reveal based on 19 (3/4") side panel

Calculating door width (DW)

Step 1: Using the Boring distance (B) determined in the reveal table, cross-reference to find the side gap distance (Y) in the table to the right.

Step 2: Use the following formula to find the door width: DW = IW - (Y x 2)

Example:

Int. width (IW) = 400mm
Side gap (Y) = 4.5mm
391 =400 - (4.5 x 2)

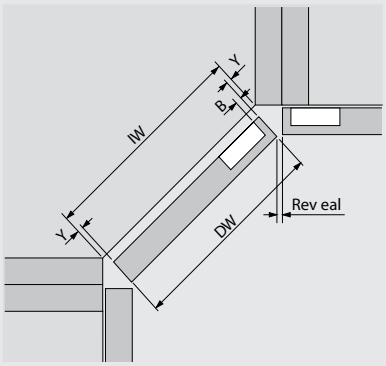

Y Side Gap			
5.5	4.5	3.5	2.5
3	4	5	6
B Bore distance			

NOTE: Calculations based on 19mm (3/4") door thickness.

KELLEY,S CABINET SUPPLY, INC.
1019 NORTH COMBEE ROAD
LAKELAND, FL. 33801

(800) 282-3653

KELLEY.S CABINET SUPPLY, INC.
3315 SW 13 ST. UNIT #6
OCALA, FL. 34474

CLIP TOP MINI HINGE

Features

- 94° opening angle
- Side adjustment of +0.5 to -3.5mm
- Hinge for small doors or doors with small frames
- Must use 26mm drill bit (1" cannot be used)

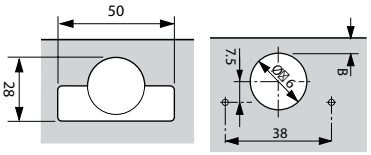

Minimum Reveal

Minimum reveal table								
1.1	2.2	3.0	3.8	5.5	7.3	9.1	3
1.1	2.0	2.7	3.5	5.0	6.8	8.6	4
1.1	1.8	2.4	3.0	4.6	6.3	8.0	5
16	18	19	20	22	24	26	B Bore
T Door thickness							

Cross-reference the door thickness and bore distance to assure that doors won't bind when opened.

See back cover fold out for more specifications ➔

Frame cabinet applications

Overlay door

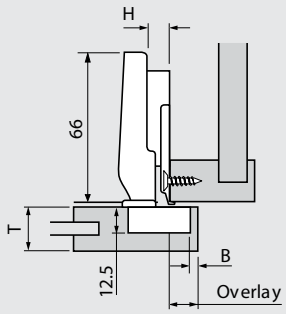

Partial overlay door

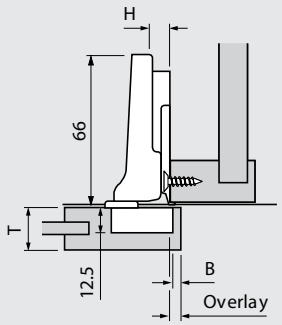

Inset door

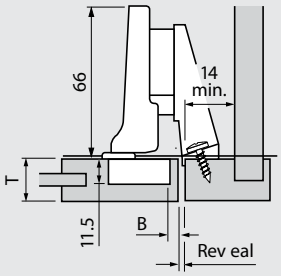

NOTE: For this application use a half-cranked hinge from above and mounting plate 175H5030.21

Panel cabinet applications

Overlay door

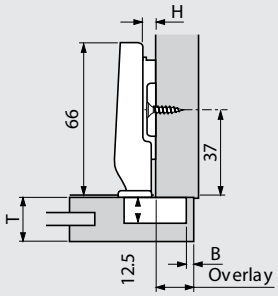

Twin overlay doors

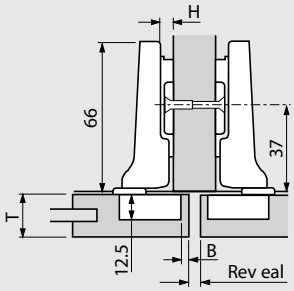

Inset door

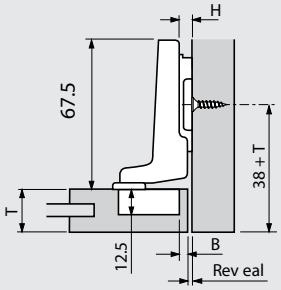

Straight-arm hinges

Self close

Screw-on 71T0550

	Overlay table				
0	13	14	15	6	19
☒	10	11	12	9	22
4.5	8.5	9.5	10.5	11	23.5
6	7	8	9	12	25
9	4	5	6	15	28
H Plate	3	4	5	P	S
	B Bore distance			Clearances	

10 fixed distance

NOTE: 4.5 plate only available for face frame, 9 plate only available for panel cabinets

Half-cranked hinges (9. 5mm)

Self close

Screw-on 71T0650

	Overlay table			Partial overlay	
0	3.5	4.5	5.5	15.5	24
H Plate	3	4	5	P	S
	B Bore distance			Clearances	

.☒ fixed distance

	Reveal table			Twin overlay		
0	9	7	5	16	15.5	25
	12	10	8	19		
	15	13	11	22		
H Plate	3	4	5	W	P	S
	B Bore distance			Panel	Clearances	

Full-cranked hinges (18mm)

Self close

Screw-on 71T0750

	Reveal table				
0	5	4	3	24	32
H Plate	3	4	5	P	S
	B Bore distance			Clearances	

- 8 fixed distance

KELLEY,S CABINET SUPPLY, INC.
1019 NORTH COMBEE ROAD
LAKELAND, FL. 33801

(800) 282-3653

KELLEY.S CABINET SUPPLY, INC.
3315 SW 13 ST. UNIT #6
OCALA, FL. 34474

CLIP TOP GLASS DOOR HINGE

Features

- 94° opening angle
- 3-dimensional adjustment
- For glass thickness of 4.5 to 7mm
- Side adjustment of +.5 to -3.5mm
- Fixing screws included
- Must use 26mm drill bit (1" cannot be used)

Minimum Reveal

Minimum reveal table				
0	0	0	0	5.5
0	0	0	0	6
0	0	0	0	6.5
0	0	0	0	7
4.5	5	6	7	B
T Door thickness				Bore

Cross reference the door thickness and bore distance to assure that doors won't bind when opened.

Frame cabinet applications

Boring pattern

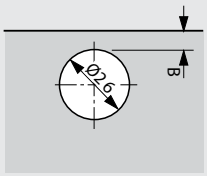

Cover caps for door front (required)

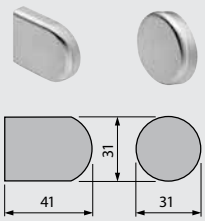

Both available in:
G = Gold polished
S = Black
CR = Chrome polished

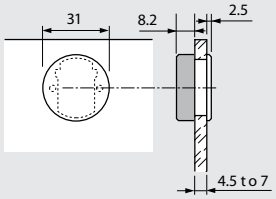

D - shape	84.4120
Round	84.4140

Panel cabinet applications

Overlay door

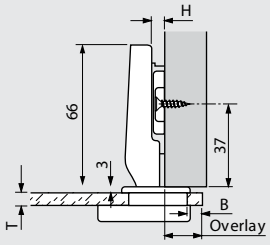

Twin overlay doors

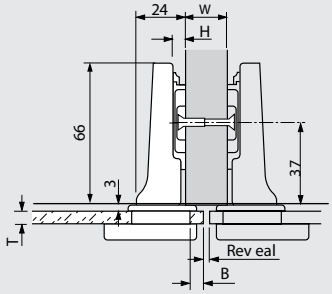

Inset door

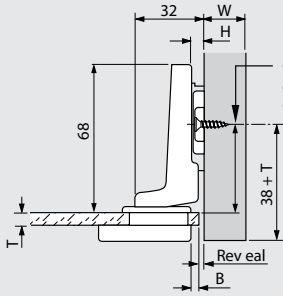

Set mounting plate back b y glass thickness and height of cover cap

Straight-arm hinges

	Self close
Screw-on	75T4100

	Overlay table					
0	15.5	16	16.5	17	6	19
3	12.5	13	13.5	14	9	22
6	9.5	10	10.5	11	12	25
9	6.5	7	7.5	8	15	28
H Plate	5.5	6	6.5	7	P	S
	B Bore distance				Clearances	

10 fixed distance

Half-cranked hinges (9. 5mm)

	Self close
Screw-on	75T4200

	Reveal table				Twin overlay		
0	4	3	1	.5	16	15	24
	7	6	5	4	19		
	10	9	8	7	22		
H Plate	5.5	6	6.5	7	W	P	S
	B Bore distance				Panel	Clearances	

.5 fixed distance

Full-cranked hinges (18mm)

	Self close
Screw-on	75T4300

	Reveal table					
0	2.5	2	1.5	1	23.5	32
H Plate	5.5	6	6.5	7	P	S
	B Bore distance				Clearances	

- 8 fixed distance

KELLEY,S CABINET SUPPLY, INC.
1019 NORTH COMBEE ROAD
LAKELAND, FL. 33801

(800) 282-3653

KELLEY.S CABINET SUPPLY, INC.
3315 SW 13 ST. UNIT #6
OCALA, FL. 34474

CLIP TOP BI-FOLD HINGE

Features

- New spiral tech side adjustment for door gap
- Spiral tech depth adjustment for in / out
- 60˚ opening angle
- 4-dimensional adjustment
- All metal hinge, nickel plated

Application

Inside corner

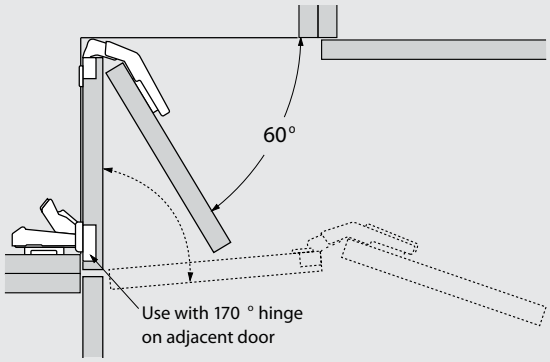

Bi-fold hinges		Self close
Screw-on		79T8500.10
Press-in	21	79T8530.10

General specifications

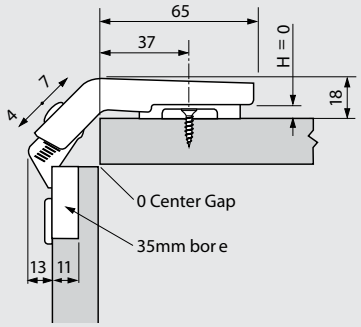

With flat panel doors

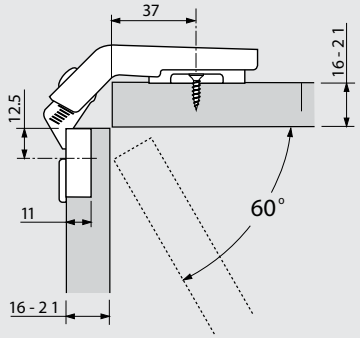

With profile doors

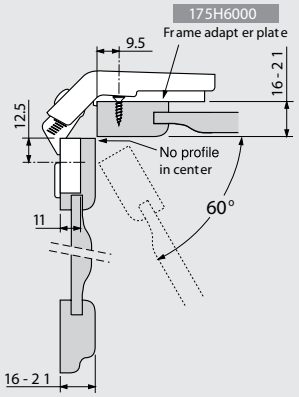

Calculating door sizes

The doors for a CLIP top bi-fold application can be of equal or unequal width. To calculate the door width (DW) of each door:

Step 1: Add the interior width (IW) to the side panel width (W).

Step 2: Subtract door thickness (T) and reveal (R).

Step 3: Subtract gap (G) and bumper thickness behind adjacent door.

Formula: DW = (IW + W) - T - R - G

Example: DW = (500 + 19) - 19 - 3 - 1
DW = 496mm

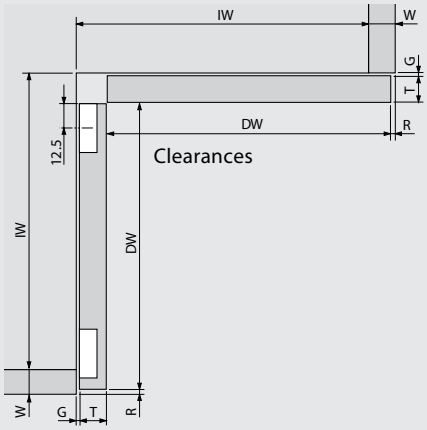

Adjustment

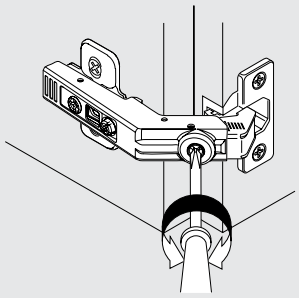

The new spiral tech cam adjustment of the CLIP top bi-fold hinge allows from + 4mm to -7mm adjustment.

KELLEY,S CABINET SUPPLY, INC.
1019 NORTH COMBEE ROAD
LAKELAND, FL. 33801

(800) 282-3653

KELLEY.S CABINET SUPPLY, INC.
3315 SW 13 ST. UNIT #6
OCALA, FL. 34474

CLIP 100 DEGREE HINGE

Features

- 100 ° opening angle
- 3-dimensional adjustment
- All metal hinge, nickel plated
- Available with INSERTA tool-free attachment

Minimum Reveal

Minimum reveal table						
0.5	0.9	1.1	1.4	2.3	3.6	3
0.5	0.8	1.0	1.3	2.0	3.3	4
0.4	0.8	1.0	1.2	1.8	3.0	5
0.4	0.8	.9	1.1	1.7	2.8	6
16	18	19	20	22	24	B
T Door thickness						Bore

Cross-refer - ence the door thickness and bore distance to assure that doors won't bind when opened.

Frame cabinet applications

Overlay door

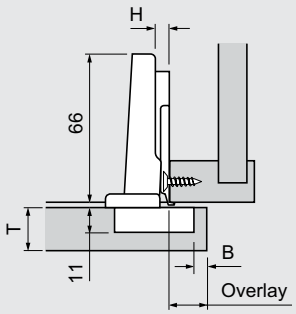

Partial overlay door

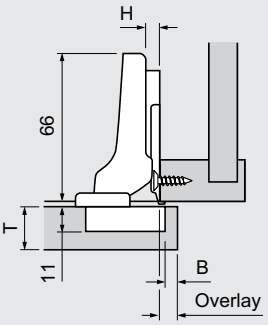

Inset door

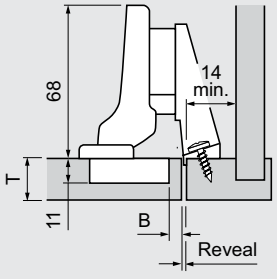

NOTE: For this application use a half-cranked hinge from above and mounting plate 175H5030.21

Panel cabinet applications

Overlay door

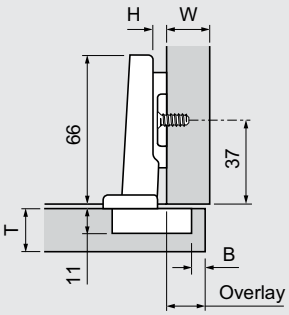

Twin overlay doors

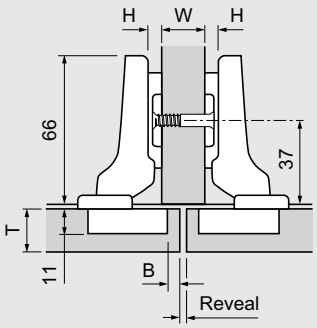

Inset door

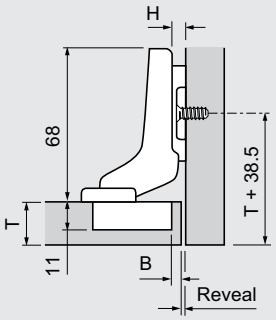

Straight-arm hinges

	Self close	Free swing
Screw-on	71M2550	70M2550
Press-in 11	71M2580	70M2580
INSERTA	71M2590B	

Overlay table						
0	14	15	16	17	9	20
3	11	12	13	14	12	23
4.5	9.5	10.5	11.5	12.5	13.5	24.5
6	8	9	10	11	15	26
9	5	6	7	8	18	29
H Plate	3	4	5	6	P	S
	B Bore distance				Clearances	

11 fixed distance

NOTE: 4?5?plate only available for face frame,
9 plate only available for panel cabinets

Half-cranked hinges (9. ? mm)

	Self close
Screw-on	71M2650
Press-in 11	71M2680
INSERTA	71M2690B

Overlay table					Partial overlay	
0	4.5	5.5	6.5	7.5	18.5	30
H Plate	3	4	5	6	P	S
	B Bore distance				Clearances	

1.5 fixed distance

Reveal table					Twin overlay		
0	7	5	3	1	16	18. 5	30
	10	8	6	4	19		
	13	11	9	7	22		
H Plate	3	4	5	6	W Panel	P	S
	B Bore distance					Clearances	

Full-cranked hinges (18mm)

	Self close
Screw-on	71M2750
Press-in 11	71M2780
INSERTA	71M2790B

Reveal table						
0	4	3	2	1	27	38
H Plate	3	4	5	6	P	S
	B Bore distance				Clearances	

- 7 fixed distance

KELLEY,S CABINET SUPPLY, INC.
1019 NORTH COMBEE ROAD
LAKELAND, FL. 33801

(800) 282-3653

KELLEY.S CABINET SUPPLY, INC.
3315 SW 13 ST. UNIT #6
OCALA, FL. 34474

POSITIVE & NEGATIVE HINGES

Positive angled CLIP top hinges

+15˚ 79A9494BT

+20˚ 79A9595BT

+30˚ II * 79A9596BT

+30˚ III * 79A9496BT

+45˚ I * 79A9698BT

+45˚ II * 79T5590B

+45˚ III * 79A9498BT

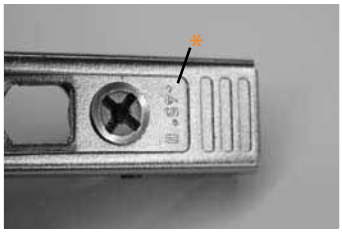

* These angled hinges are marked I, II, or III on the hinge arm for differentiation (see photo).

Negative angled CLIP top hinges

-15˚ 79A5493BT

-30˚ 79A5491BT

-45˚ 79A5490BT

Standard CLIP top thick door hinges used in angled applications

95˚ Full-OL 71T9590B

95˚ Half-OL 71T9690B

95˚ Inset 71T9790B

Angled spacer wedges for positive and negative angled hinges

-5˚ 171A5500

+5˚ 171A5010

+5˚ 171A5040

+5˚ 171A5070

KELLEY,S CABINET SUPPLY, INC.
1019 NORTH COMBEE ROAD
LAKELAND, FL. 33801

(800) 282-3653

KELLEY.S CABINET SUPPLY, INC.
3315 SW 13 ST. UNIT #6
OCALA, FL. 34474

CLIP MOUNTING PLATES

One piece wing mounting plate

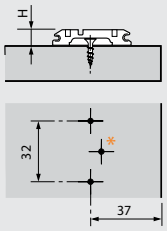

- Steel, nickel plated
- Attached with wood screws #6 x 5/8" (606P)
- Height adjustment ±3mm
- *Add additional wood screw if used with wide angled hinges

Wood screws #6 x 5/8" (606P)	(H) Height 0	(H) Height 3
	173L6100	173L6130

One piece wing mounting plate

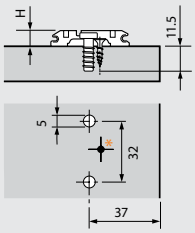

- Steel, nickel plated
- Attached with pre-mounted system screws Ø 5mm (668.1450.EH)
- Height adjustment ±3mm
- *Add additional wood screw if used with wide angled hinges

System screws 668.1450.EH	(H) Height 0	(H) Height 3
	173L8100	173L8130

Cam mounting plate

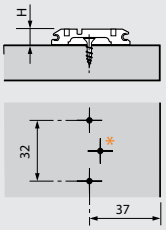

- Steel, nickel plated
- Attached with wood screws #6 x 5/8" (606P)
- Cam height adjustable ± 2mm
- *Add additional wood screw if used with wide angled hinges

Wood screws #6 x 5/8" (606P)	(H) Height 0	(H) Height 3
	173H7100	173H7130

EXPANDO cam mounting plate

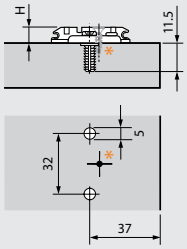

- Steel, nickel plated
- Attached with pre-mounted screws with EXPANDO dowels
- Cam height adjustment ±2mm
- *Add additional wood screw if used with wide angled hinges

EXPANDO dowels Pre-mounted	(H) Height 0	(H) Height 3
	174H7100E	174H7130E

KELLEY,S CABINET SUPPLY, INC.
1019 NORTH COMBEE ROAD
LAKELAND, FL. 33801

(800) 282-3653

KELLEY.S CABINET SUPPLY, INC.
3315 SW 13 ST. UNIT #6
OCALA, FL. 34474

CLIP MOUNTING PLATES

One piece wing mounting plate

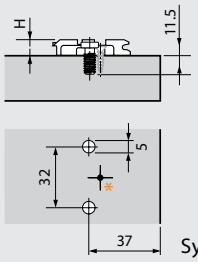

- Zinc die-cast, nickel plated
- Attached with pre-mounted system screws Ø 5mm (668.1450.EH)
- Height adjustment ±3mm
- *Add additional wood screw if used with wide angle hinges

System screws	(H) Height 0	(H) Height 3	(H) Height 9
668.1450.EH	175L8100	175L8130	175L8190

Two piece wing mounting plate

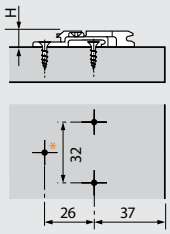

- Zinc die-cast, nickel plated
- Attached with wood screws #6 x 5/8" (606P)
- Height adjustment ±2mm
- *Add additional wood screw if used with wide angled hinges

Wood screws	(H) Height 0	(H) Height 3	(H) Height 9
#6 x 5/8" (606P)	175H7100	175H7130	175H7190

Two piece wing mounting plate

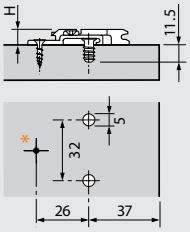

- Zinc die-cast, nickel plated
- Attached with system screws Ø 5mm (661.1150.HG
- Height adjustment ±2mm
- *Add additional wood screw if used with wide angled hinges

Wood screws or System screws	(H) Height 0	(H) Height 3	(H) Height 6	(H) Height 9	(H) Height 18
#7 x 5/8" (707N) 661.1150.HG	175H9100	175H9130	175H9160	175H9190	175H9190.22

Face frame cam adapter plate – center mount

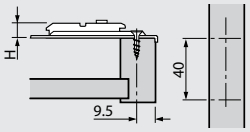

- Steel, zinc die-cast and nickel plated
- Center mount 9.5 (3/8")
- Cam height adjustment ±2mm
- Use of the PlateMate recommended

Wood screws	(H) Height 0	(H) Height 3	(H) Height 4.5	(H) Height 6
#7 x 3/4" (7074N)	175H6000 *	175H6030	175H6040	175H6060

* 175H6000 not for use with INSERTA hinges (use 175H6600)

KELLEY,S CABINET SUPPLY, INC.
1019 NORTH COMBEE ROAD
LAKELAND, FL. 33801

(800) 282-3653

KELLEY.S CABINET SUPPLY, INC.
3315 SW 13 ST. UNIT #6
OCALA, FL. 34474

CLIP MOUNTING PLATES

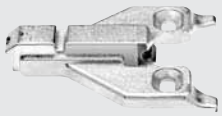

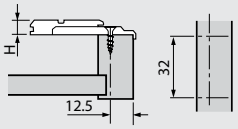

- Zinc die-cast, nickel plated
- Off-center mount 12.5 (1/2")
- Height adjustment ±2mm
- Use of the PlateMate recommended

Wood screws	(H) Height 0	(H) Height 3	(H) Height 6
#7 x 3/4" (7074N)	175L6600.22	175L6630.22	175L6660.22

Inset face frame cam adapter plate

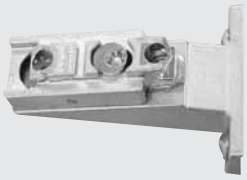

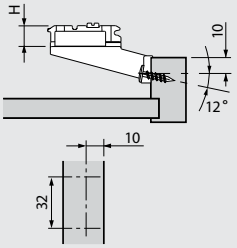

- Use with half-cranked hinges only
- Zinc die-cast, nickel plated
- Attached with truss head screws #8 x 3/4" (834TH)
- Can be used on frames with applied bead molding
- Cam height adjustment ±2mm
- 170° hinges not recommended
- Use of the PlateMate required

Wood screws or System screws	(H) Height 3
#8 x 3/4" truss head (834TH)	175H5030.21

Face frame mounting plate with flange

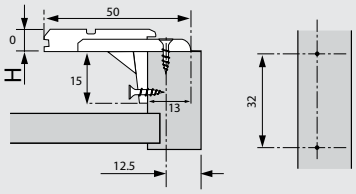

- Recommended when using the 170 ^{0} and 0 protrusion hinges on face frame cabinets
- Zinc die-cast, nickel plated
- Off-center mount 12.5 (1/2")
- Height adjustment ±2mm
- Use of the PlateMate recommended
- Replaces 175L6600.23

Wood screws	(H) Height 0
#7 x 3/4" (707N)	175L6600.24

KELLEY,S CABINET SUPPLY, INC.
1019 NORTH COMBEE ROAD
LAKELAND, FL. 33801

(800) 282-3653

KELLEY.S CABINET SUPPLY, INC.
3315 SW 13 ST. UNIT #6
OCALA, FL. 34474

COMPACT 38N HINGES

Features

- Steel, nickel plated
- 105 ˚ opening angle
- One piece assembly
- Wrap around or edge mount
- 7/16" cup depth
- ±1/8" height adjustment
- ±1/16" side adjustment
- +3/32" -1/32" cam depth adjustment

Minimum reveal

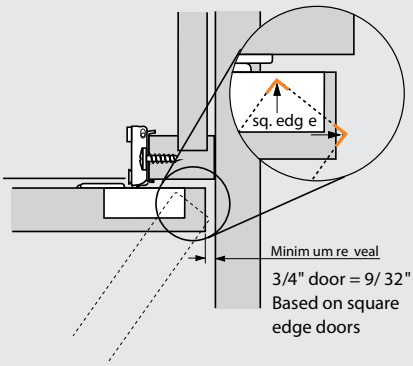

Overlay application

	3/8"	7/16"	1/2"	5/8"	3/4"
Wrap around					
Screw-on	38N355C.06	38N355C.07	38N355C.08	38N355C.10	38N355C.12
Press-in 37	38N358C.06	38N358C.07	38N358C.08	38N358C.10	38N358C.12
Edge mount			1/2"		
Screw-on			38N355CE08		
Press-in 37			38N358CE08		

Attachment

Wrap around

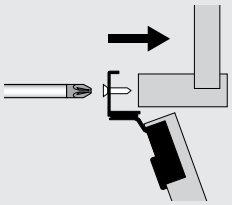

Edge mount

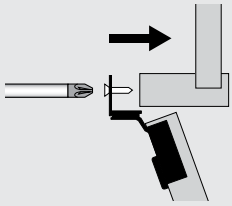

Wood screws

#10x 3/4" pilot bore 1034N

#8 x 3/4" self-drilling 834TH

Adjustment

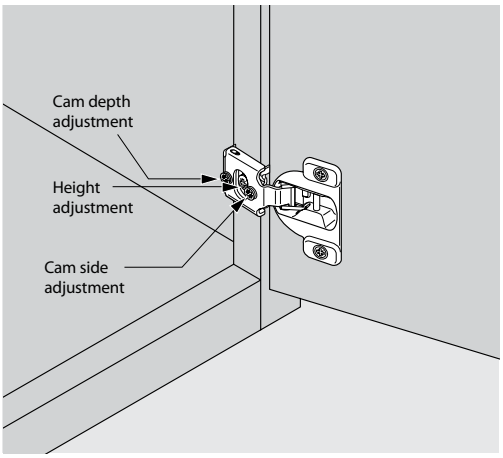

Dimensions

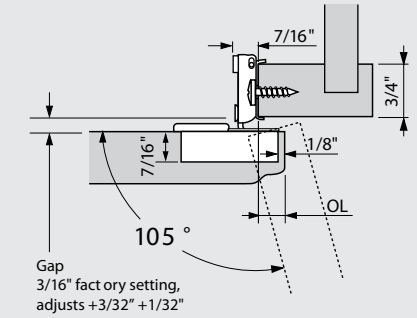

Boring pattern

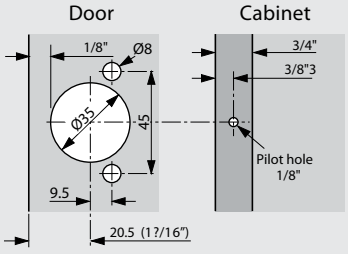

Door protrusion

OL	P
3/8"	1/4"
7/16"	3/16"
1/2"	1/8"
5/8"	0
3/4"	0

OL = Door overlay

P = Door Protrusion

KELLEY,S CABINET SUPPLY, INC.
1019 NORTH COMBEE ROAD
LAKELAND, FL. 33801

(800) 282-3653

KELLEY.S CABINET SUPPLY, INC.
3315 SW 13 ST. UNIT #6
OCALA, FL. 34474

COMPACT 39C HINGES

Features

- Steel, nickel plated
- 110˚ opening angle
- One piece assembly
- Wrap around mount
- 1/? " cup depth
- ±1/8" height adjustment
- ±1/16" cam side adjustment
- +3/32" -1/32" cam depth adjustment

Minimum reveal

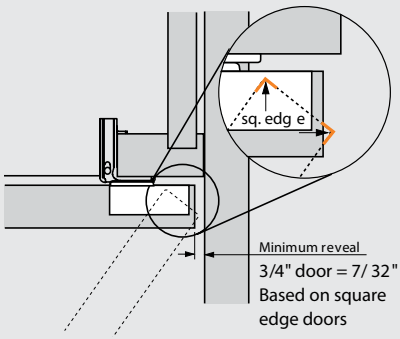

Overlay application

Wrap around	1"	1-1/4"	1-5/16"	1-3/8"	1-1/2"	1-9/16"
Screw-on	39C355C.16	39C355C.20	39C355C.21	39C355C.22	39C355C.24	39C355C.25
Press-in 37	39C358C.16	39C358C.20	39C358C.21	39C358C.22	39C358C.24	39C358C.25

Attachment

Wrap around

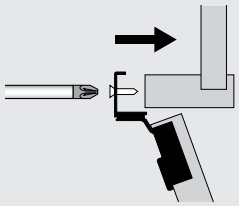

Wood screws

#10x 3/4" pilot bore	1034N

#8 x 3/4" self-drilling	834TH

Adjustment

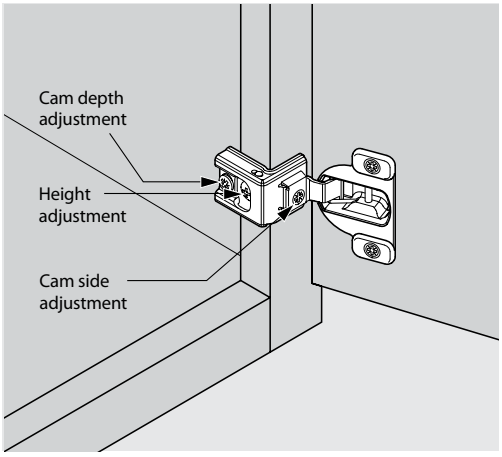

Dimensions

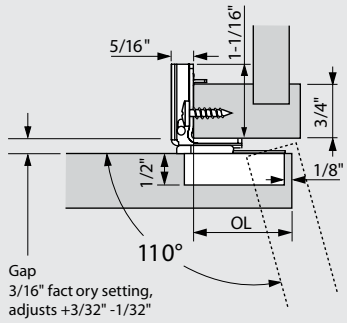

Boring pattern

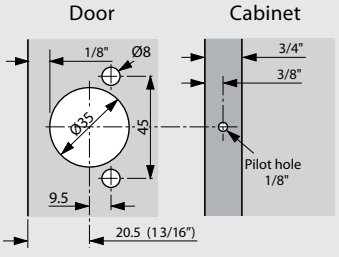

KELLEY,S CABINET SUPPLY, INC.
1019 NORTH COMBEE ROAD
LAKELAND, FL. 33801

(800) 282-3653

KELLEY.S CABINET SUPPLY, INC.
3315 SW 13 ST. UNIT #6
OCALA, FL. 34474

COMPACT 33 HINGES

Features

- Zinc die-cast hinge and mounting plates
- 110° opening angle
- Two piece assembly
- Wrap around, edge or face mount
- 1/2" cup depth
- ±9/64" height adjustment
- -1/8" side adjustment only

Minimum reveal

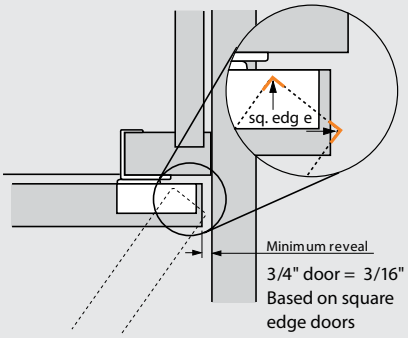

Overlay Application

Screw-on		33.3600
Press-in	37	33.3630

Attachment

Wrap around

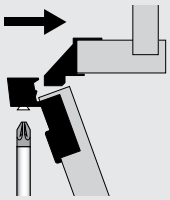

Edge mount

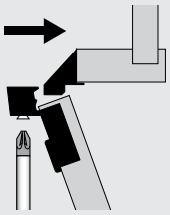

Face mount

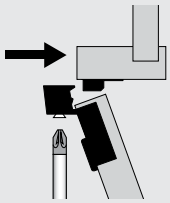

Mounting

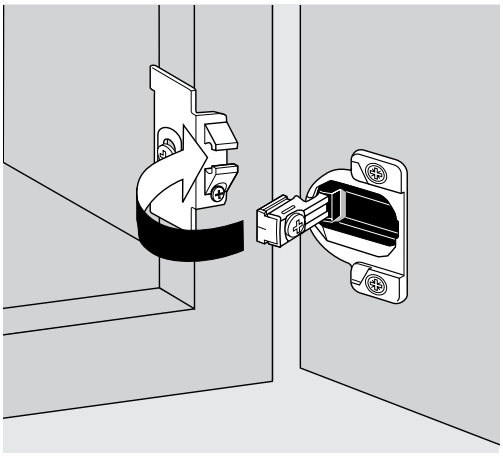

Boring pattern

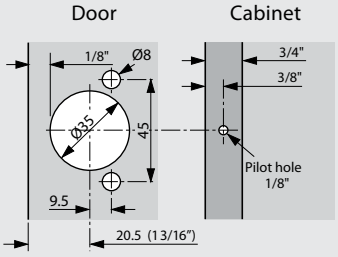

KELLEY,S CABINET SUPPLY, INC.
1019 NORTH COMBEE ROAD
LAKELAND, FL. 33801

(800) 282-3653

KELLEY.S CABINET SUPPLY, INC.
3315 SW 13 ST. UNIT #6
OCALA, FL. 34474

COMPACT 33 MOUNTING PLATES

Wrap around mounting plates

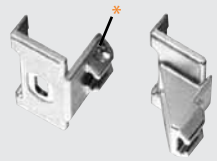

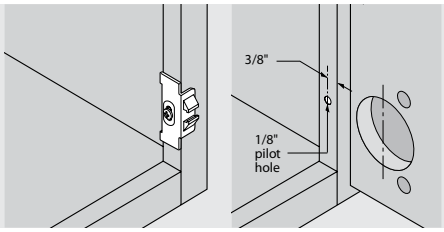

- Zinc die-cast, nickel plated
- Attached with #10 x 3/4" wood screws (1034N)
  or #8 x Self-drilling wood screws (834TH)
- Overlays from 1/2" to 1-5/8"

Overlays	1/2"	⊠/8"	3/4"	1"	1-1/8"
	130.2100.23	130.2100.26	130.2100.22	130.2110.02	130.2120.02
	1-1/4"	1-3/8"	1-1/5"	1-5/8"	
	130.2130.23	130.2140.02 *	130.2150.02 *	130.2160 *	

* An additional attachment screw is required on mounting plates with 1- 3/8" to 1- 5/8" overlays to insure stability. Install after height adjustments have been made.

Edge mount mounting plates

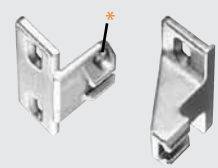

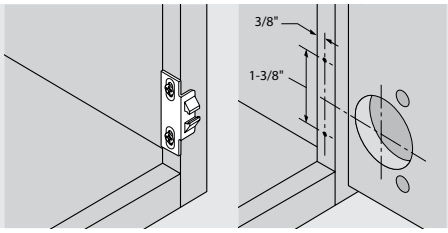

- Zinc die-cast, nickel plated
- Attached with #6 x 5/8" wood screws (606P)
- Overlays from 1/ 4" to 1- 5/8"

Overlays	1/4"	1/2"	5/8"	3/4"	1"
	130.1100.24	130.1100.23	130.1100.26	130.1100.22	130.1110.02
	1-1/8"	1-1/4"	1-3/8"	1-1/2"	1-5/8"
	130.1120.02	130.1130.02	130.1140.02 *	130.1150.02 *	130.1160 *

* An additional attachment screw is required on mounting plates with 1- 3/8" to 1- 5/8" overlays to insure stability. Install after height adjustments have been made.

Face mount mounting plates

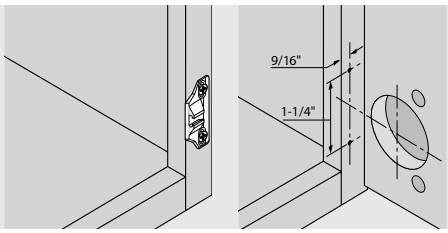

- Zinc die-cast, nickel plated
- Attached with #6 x 5/8" wood screws (606P)
- Overlay 1- 3/8" or greater

Overlays	1-3/8" +
	133.0240

Mounting plate specifications

Maximum overlay of 1/2 "
using a 130.2100.23
wrap around plate

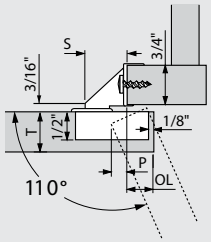

Maximum overlay of 1- 5/8"
using a 130.2160
wrap around plate

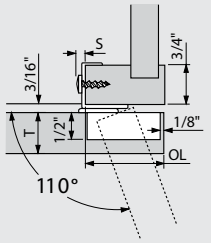

Hinge arm protrusion (S) , and door protrusion (P) , for wrap around mounting plates

Mounting Plate	OL	S	P
130.2100.23	1/2"	7/8"	1/4"
130.2100.26	5/8"	3/4"	1/8"
130.2100.22	3/4"	5/8"	0
130.2110.02	1"	3/8"	0
130.2120.02	1-1/8"	1/4"	0
130.2130.23	1-1/4"	3/16"	0
130.2140.02	1-3/8"	3/16"	0
130.2150.02	1-1/2"	3/16"	0
130.2160	1-5/8"	3/16"	0

Hinge arm protrusion (S) , and door protrusion (P) , for edge mount mounting plates

Mounting Plate	OL	S	P
130.1100.24	1/4"	1-1/8"	1/2"
130.1100.23	1/2"	7/8"	1/2"
130.1100.26	5/8"	3/4"	1/8"
130.1100.22	3/4"	5/8"	0
130.1110.02	1"	3/8"	0
130.1120.02	1-1/8"	1/4"	0
130.1130.02	1-1/4"	3/16"	0
130.1140.02	1-3/8"	3/16"	0
130.1150.02	1-1/2"	3/16"	0
130.1160	1-5/8"	3/16"	0

KELLEY,S CABINET SUPPLY, INC.
1019 NORTH COMBEE ROAD
LAKELAND, FL. 33801

(800) 282-3653

KELLEY.S CABINET SUPPLY, INC.
3315 SW 13 ST. UNIT #6
OCALA, FL. 34474

BLUMOTION 973A FOR STANDARD HINGE

Application

Description

- Offers the same quality of motion as in drawer systems with BLUMOTION
- Automatically adjusts to the closing force of the door
- Simple attachment to Blum euro hinges
- Nickel plated steel construction
- Designed for use with Blum euro hinges only

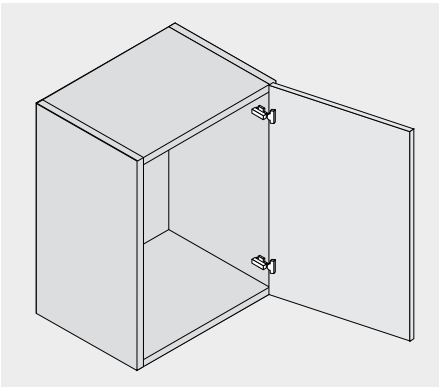

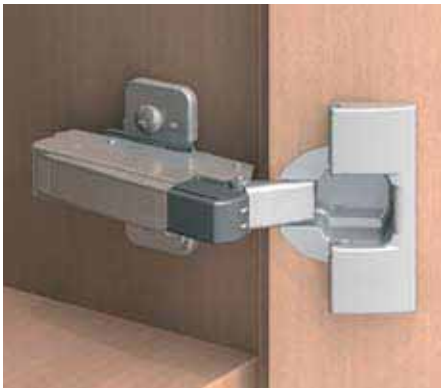

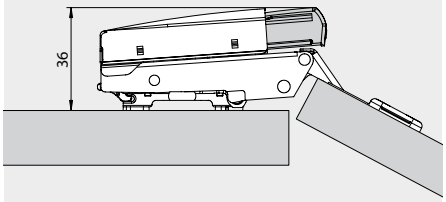

For hinges with a straight hinge arm

- CLIP top 107°
- CLIP top 120°
- CLIP top 120°+
- CLIP top thick door
- CLIP top special 110°
- CLIP top 120° aluminum door
- CLIP 100°
- CLIP 107°

	Part no.
Straight arm	973A0500.01

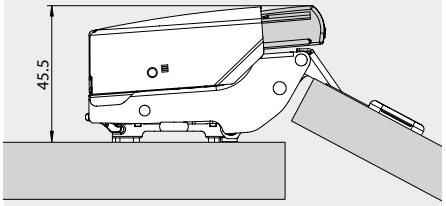

For hinges with a half-cranked hinge arm

- CLIP top 107°
- CLIP top 120°
- CLIP top thick door
- CLIP top 120° aluminum door
- CLIP 100°
- CLIP 107°

	Part no.
Half-cranked arm	973A0600

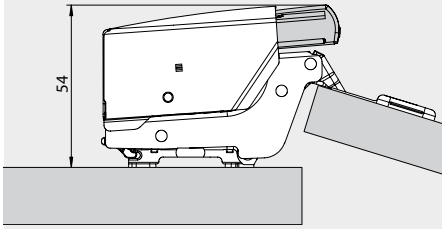

For hinges with a full-cranked hinge arm

- CLIP top 107°
- CLIP top thick door
- CLIP 100°

	Part no.
Full-cranked arm	973A0700

KELLEY,S CABINET SUPPLY, INC.
1019 NORTH COMBEE ROAD
LAKELAND, FL. 33801

(800) 282-3653

KELLEY.S CABINET SUPPLY, INC.
3315 SW 13 ST. UNIT #6
OCALA, FL. 34474

BLUMOTION 973A FOR STANDARD HINGE

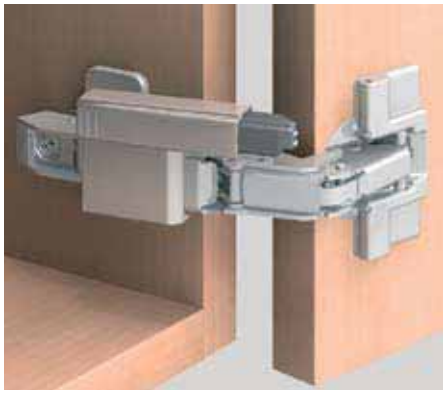

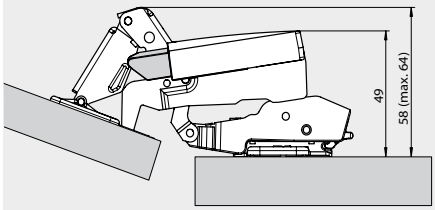

For wide angle hinges with a straight or half-cranked hinge arm

- CLIP top 170° – straight arm
- CLIP top 170° – half-cranked
- CLIP top 155° 0-protrusion hinge

NOTE: Additional clearance of 41mm needed above and below for interior rollout.

Part no.

973A6000

BLUMOTION 973A recommendation

- BLUMOTION 973A is designed for one BLUMOTION per self-closing hinge, however, quantity may vary depending on door size and weight; trial application recommended.
- Small or light doors may only require one BLUMOTION.

- BLUMOTION 973A
- Hinges

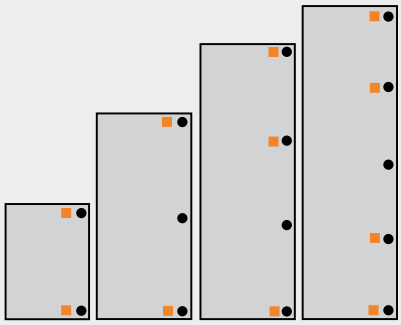

Attachment

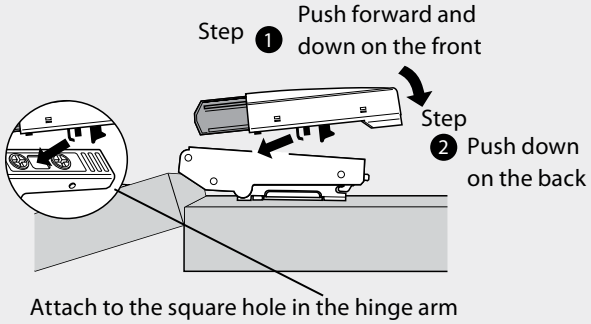

Attach to the square hole in the hinge arm

Removal

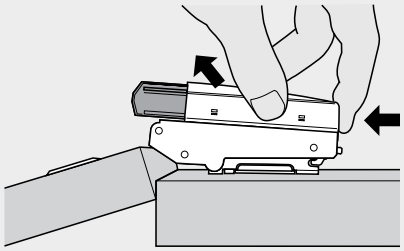

Push forward and pull up simultaneously

KELLEY,S CABINET SUPPLY, INC.
1019 NORTH COMBEE ROAD
LAKELAND, FL. 33801

(800) 282-3653

KELLEY.S CABINET SUPPLY, INC.
3315 SW 13 ST. UNIT #6
OCALA, FL. 34474

BLUMOTION 971A FOR EURO HINGES

Application

Description

- Offers the same quality of motion as in drawer systems with BLUMOTION
- Adjustable to various door sizes and weights. (+3/-7mm range)
- Installed onto hinge-side panel
- Nickel plated zinc diecast construction
- For use with straight arm hinge and either 0mm or 3mm mounting plate only
- Designed for use with Blum euro hinges only

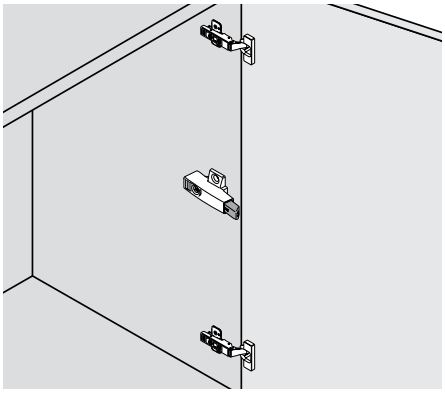

Components

Wing plate

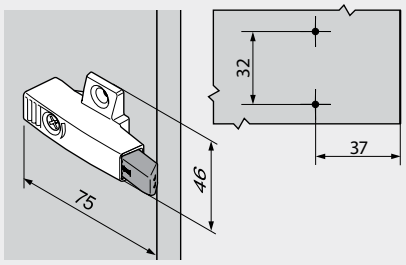

- 37mm set back, 32mm apart
- #6 wood screw

	Part no.
0mm	971A0500
3mm	971A2500

Wing plate EXPANDO

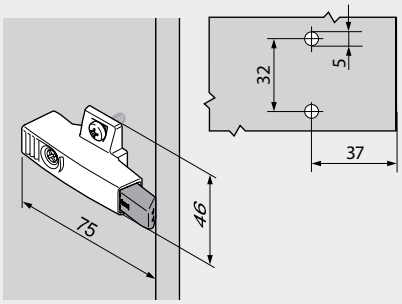

- 37mm set back, 32mm apart
- 5mm EXPANDO dowels

	Part no.
0mm	971A05E0
3mm	971A25E0

Face frame adapter plate

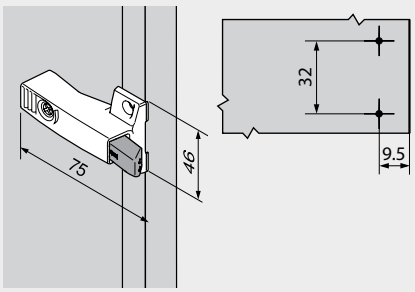

- Center mount 9.5mm
- #6 wood screw

	Part no.
0mm	971A0700
3mm	971A2700

KELLEY,S CABINET SUPPLY, INC.
1019 NORTH COMBEE ROAD
LAKELAND, FL. 33801

(800) 282-3653

KELLEY.S CABINET SUPPLY, INC.
3315 SW 13 ST. UNIT #6
OCALA, FL. 34474

BLUMOTION 971A FOR COMPACT HINGES

Application

Description

- Offers the same quality of motion as Blum drawer systems with BLUMOTION
- Adjustable for various door sizes and weights. (5 /-5mm range)
- Installs anywhere on the hinge-side of the cabinet
- Nickel plated zinc die cast construction
- Designed for use with Blum COMPACT hinges only

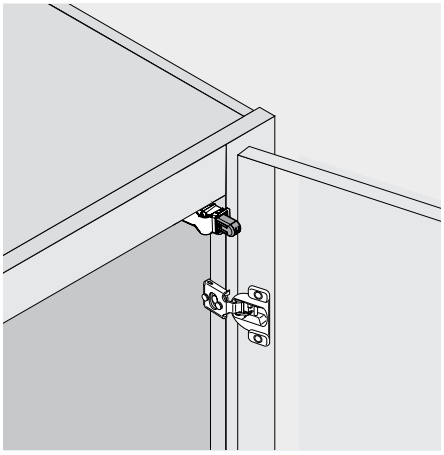

BLUMOTION mechanism

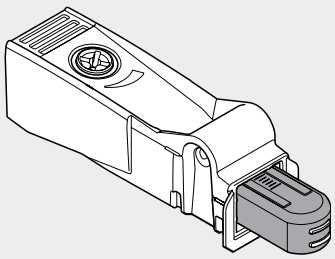

Full overlay - 1" or greater overlay

	Part no.
BLUMOTION mechanism	971A9700
#8 x 1-1/4 wood screw	81142

Partial overlay spacer

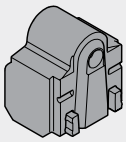

Partial overlay - less than 1" overlay

	Part no.
Spacer	971A9709
#8 x2 wood screw	82007

BLUMOTION polybag set

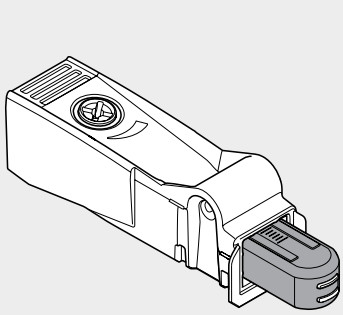

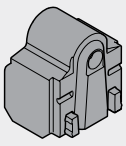

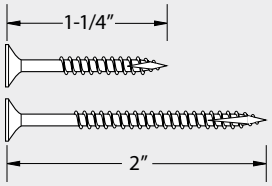

Polybag set can be used for all COMPACT overlays

Part no.
971A9700.A1

KELLEY,S CABINET SUPPLY, INC.
1019 NORTH COMBEE ROAD
LAKELAND, FL. 33801

(800) 282-3653

KELLEY.S CABINET SUPPLY, INC.
3315 SW 13 ST. UNIT #6
OCALA, FL. 34474

BLUMOTION 970A

Application

Description

- Offers the same quality of motion as in drawer systems with BLUMOTION
- Automatically adjusts to the closing force of the door
- Installed into the top and or bottom panel or with adapter plates on hinge-side
- Up to two BLUMOTION per cabinet (one top and one bottom) depending on size and weight of door; trial application recommended
- Cannot be used with inset adapter plate (970.5203.21)
- Designed for use with Blum euro hinges

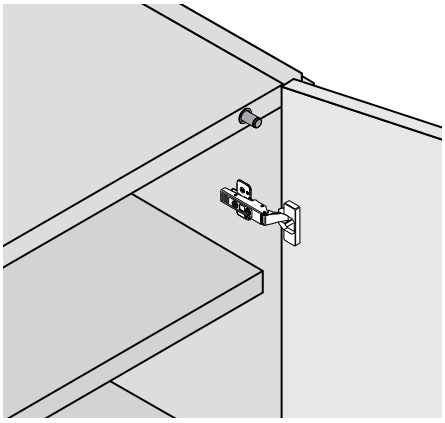

BLUMOTION 970A requirements

	Part no.
BLUMOTION	970A1002

The table on the right hand page provides the corresponding boring distance for each application.

Boring distance (X) in mm

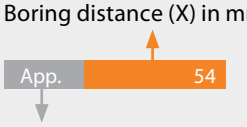

*Application (App)

* Refer to the special application section of the concealed hinge catalog

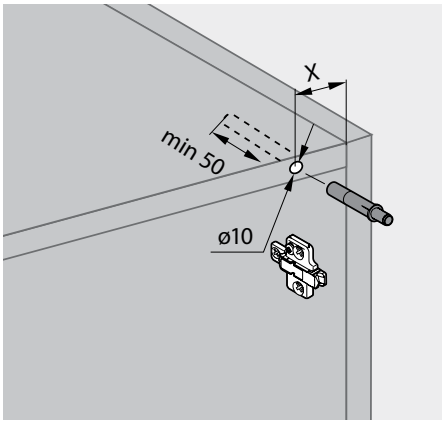

Wing adapter plate

In-line adapter plate

Adapter plates

BLUMOTION adapter plates 970.XXXX are required for the following applications:

Inset application

Inset angled application

Mitered angled application

When using narrow top rails or larger door gaps, the use of an adapter plate is recommended.

KELLEY,S CABINET SUPPLY, INC.
1019 NORTH COMBEE ROAD
LAKELAND, FL. 33801

(800) 282-3653

KELLEY.S CABINET SUPPLY, INC.
3315 SW 13 ST. UNIT #6
OCALA, FL. 34474

BLUMOTION ADAPTER PLATES FOR 970A & 970

Face frame adapter

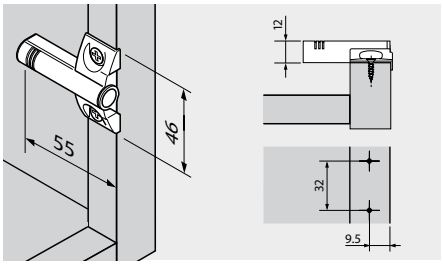

- Can also be used in panel cabinets
- Installs with two #6 x 5/8 " wood screws (606N or 606P)

	Part no.
Zinc die-cast	970.5701
Nylon-gray	970.1701

Face frame double adapter

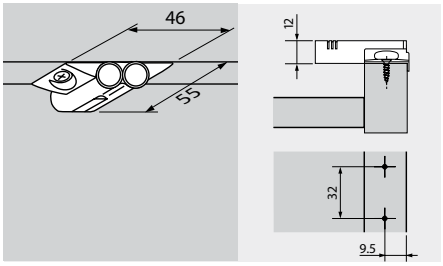

- Can also be used in panel cabinets
- Ideal for butt (twin) door applications
- Installs with two #6 x 5/8 " wood screws (606N or 606P)

	Part no.
Zinc die-cast	970.6701

In-line adapter: screw-on & press-in

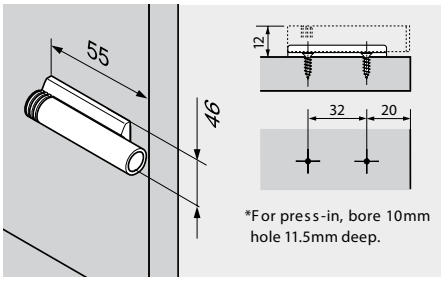

*For press-in, bore 10mm hole 11.5mm deep.

- Two-piece design
- Installs with two #6 x 5/8 " wood screws (606N or 606P)

	Part no.
Zinc die-cast	
Screw-on	970.5201
Press-in	970.5231
Nylon-gray	
Screw-on	970.1201
Press-in	970.1231

37/32mm adapter

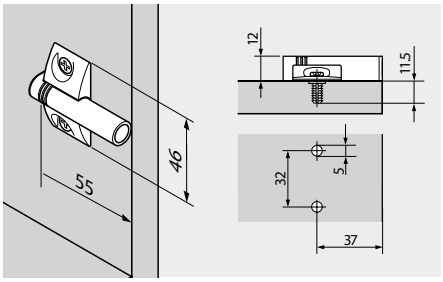

- EXPANDO version installs with pre-attached screws
- Screw-on version installs with two #6 x 5/8 " wood screws (606N or 606P)

	Part no.
EXPANDO	
Zinc die-cast	970.55E1
Nylon-gray	970.15E1
Screw-on	
Nylon-gray	970.1501

37/32mm double adapter

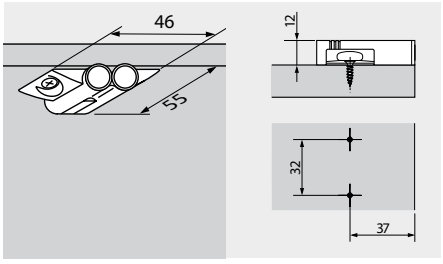

- Ideal for butt (twin) door applications or heavy doors
- Installs with two #6 x 5/8 " wood screws (606N or 606P)

	Part no.
Nylon-gray	970.2501

Inset adapter

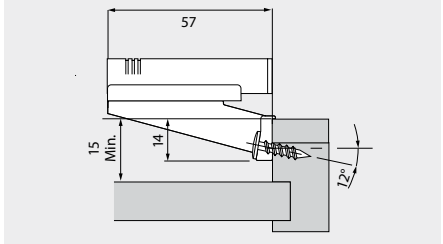

- Two-piece design
- For inset doors
- Installs with two # 8 x 3/4" truss head screws (Blum # 834TH)
- Not for use with 970A

	Part no.
Zinc die-cast	970.5203.21

KELLEY,S CABINET SUPPLY, INC.
1019 NORTH COMBEE ROAD
LAKELAND, FL. 33801

(800) 282-3653

KELLEY.S CABINET SUPPLY, INC.
3315 SW 13 ST. UNIT #6
OCALA, FL. 34474

TIP-ON FOR DOORS COMPONENTS

TIP-ON set for standard doors

- For door heights less than 48”
- Nylon, gray
- Works for both overlay and inset applications
- Can be bored into the panel or used with an adjustable adapter plate
- Included self-adhesive, screw-on catch plates and screw
- For use with Blum free swing hinges

Overlay

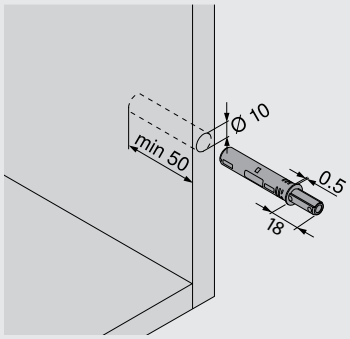

Inset

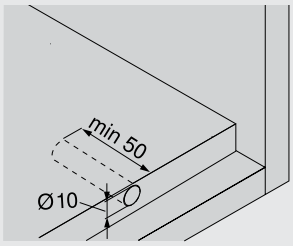

Part no.

955.1004

NOTE: Due to various door weights and sizes, trial application recommended

TIP-ON set for large doors

- For door heights greater than 48”
- Nylon, gray
- Works for both overlay and inset applications
- Can be bored into the panel or used with an adjustable adapter plate
- Included self-adhesive, screw-on catch plates and screw
- For use with Blum free swing hinges

Overlay

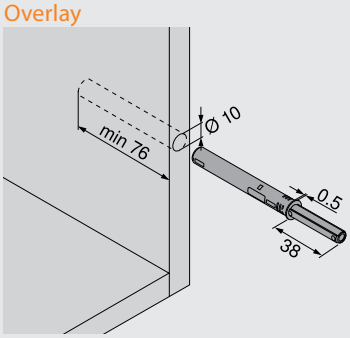

Inset

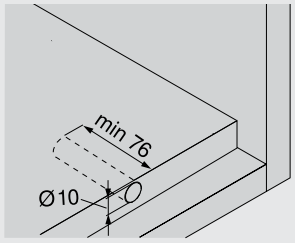

Part no.

955A1004

NOTE: Due to various door weights and sizes, trial application recommended

KELLEY,S CABINET SUPPLY, INC.
1019 NORTH COMBEE ROAD
LAKELAND, FL. 33801

(800) 282-3653

KELLEY.S CABINET SUPPLY, INC.
3315 SW 13 ST. UNIT #6
OCALA, FL. 34474

TIP-ON FOR DOORS COMPONENTS

TIP-ON in-line adapter plate

- 2 pc. Nylon, gray
- Attach with wood screws # 6 x 5/8" (606P)
- Adjustable door gap (factory setting 2mm)

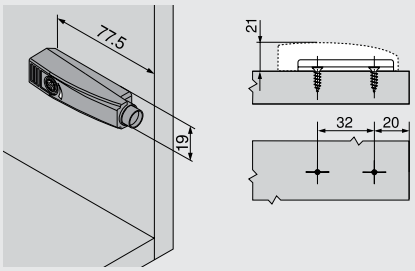

Inset boring instructions

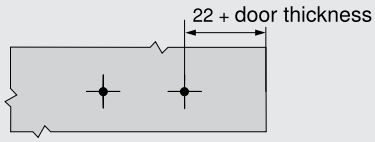

NOTE: For face frame applications, blocking out may be required

Part no.
955.1201

TIP-ON wing adapter plate

- Nylon, gray
- Attach with wood screws # 6 x 5/8" (606P)
- Adjustable door gap (factory setting 2mm)

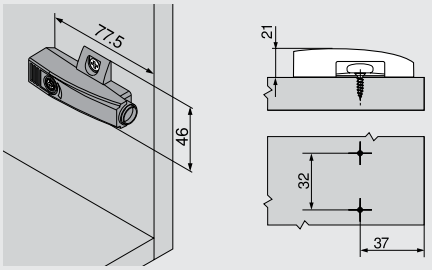

Inset boring instructions

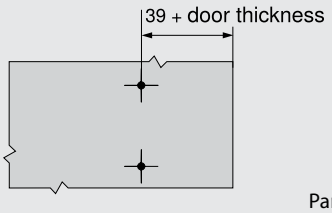

NOTE: For face frame applications, blocking out may be required

Part no.
955.1501

KELLEY,S CABINET SUPPLY, INC.
1019 NORTH COMBEE ROAD
LAKELAND, FL. 33801

(800) 282-3653

KELLEY.S CABINET SUPPLY, INC.
3315 SW 13 ST. UNIT #6
OCALA, FL. 34474

TANDEM PLUS 562H FULL EXTENSION

Overlay application

Description

- Full extension concealed drawer runners
- Available with integrated BLUMOTION
- For 16 (5/8") max. drawer side thickness
- Rear t ilt adjustment
- Concealed roller carriages with permanently lubricated synthetic rollers create a smooth running action
- Locking devices enable easy drawer insertion and removal
- Force guided right side and ± 1.5 (1/16") tolerance compensating left side
- Dynamic weight capacity of 75 lb
- Static weight capacity of 100 lb

Basic components

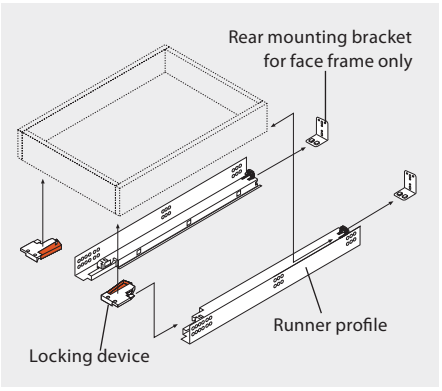

Other applications

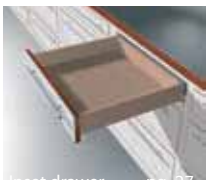

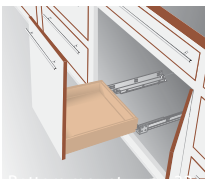

Components

Profile set

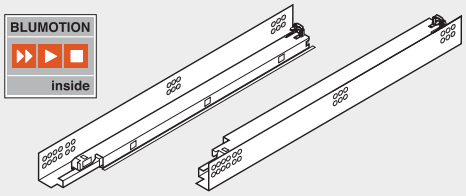

One set required per drawer

For overall cabinet depth	Drawer length	Over extension	TANDEM plus	TANDEM plus BLUMOTION
381 (15")	305 (12")	0	562H3050C	562H3050B
457 (18")	381 (15")	0	562H3810C	562H3810B
533 (21")	457 (18")	6 (1/4")	562H4570C	562H4570B
610 (24")	533 (21")	16 (5/8")	562H5330C	562H5330B

Note: These runners are for 16 (5/8") max. drawer side thickness

Standard locking device

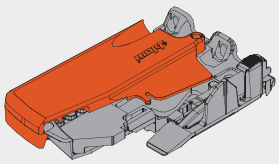

- One right and one left required per drawer
- Minimum interior drawer width 121 (4-3/4")
- Height adjustable +3 (1/8")

Right	T51.1700.04 R
Left	T51.1700.04 L
Installation screws	612TH

page 14

Rear mounting bracket for frame cabinets

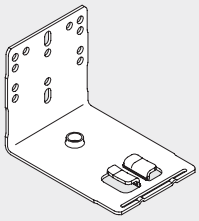

For use when installing TANDEM runners in face frame cabinets. Not necessary for panel cabinet installation.

- Two required per drawer
- Depth and side-to-side self-alignment
- Zinc-plated steel

Non-handed bracket	295.3750
Installation screws	612TH

KELLEY,S CABINET SUPPLY, INC.
1019 NORTH COMBEE ROAD
LAKELAND, FL. 33801

(800) 282-3653

KELLEY.S CABINET SUPPLY, INC.
3315 SW 13 ST. UNIT #6
OCALA, FL. 34474

562H SPECIFICATIONS

Drawer and cabinet specifications

Front view

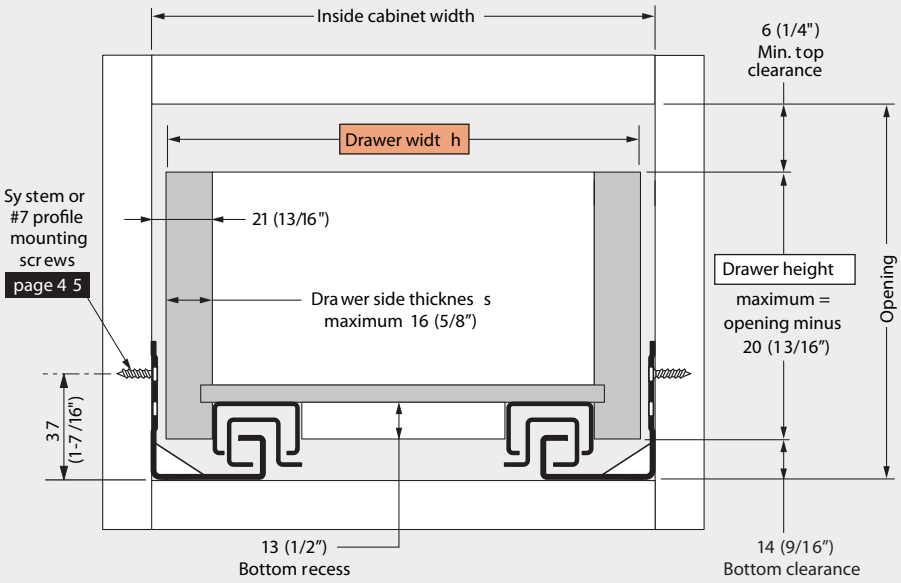

Drawer back preparation

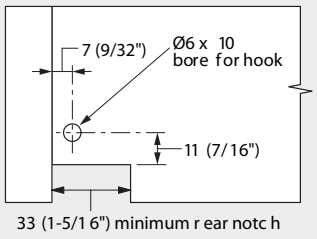

Rear mounting bracket

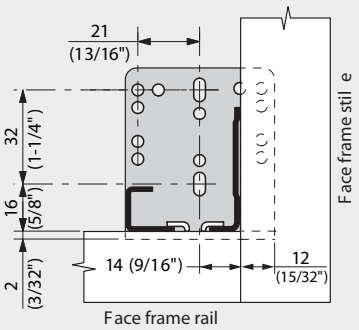

Formula for calculating outside drawer width					
For drawer side thickness	16 (5/8")	15 (19/32")	14 (9/16")	13 (1/2")	12 (15/32")
Deduct from inside cabinet width	10 (3/8")	12 (15/32")	14 (9/16")	16 (5/8")	18 (23/32")

Example: For 21" inside cabinet width and a 5/8" thick drawer, 21" minus 3/8" = 20-5/8" drawer width

Note: For frame applications.
Minimum 3 screws per bracket.

Profile mounting specifications

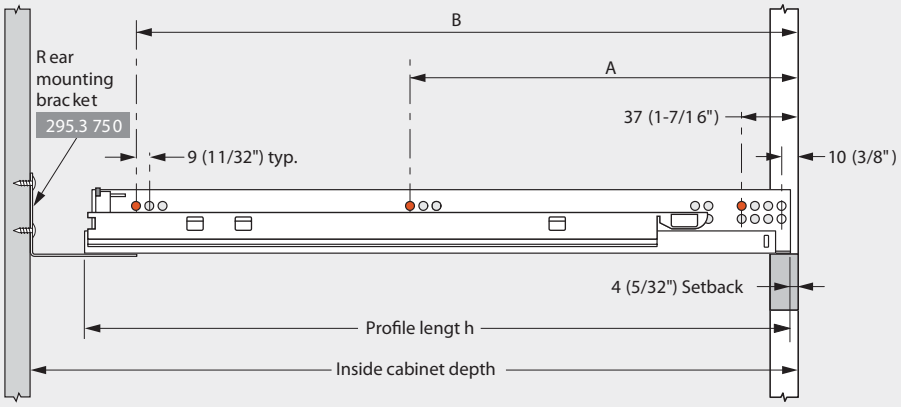

Profile close-up

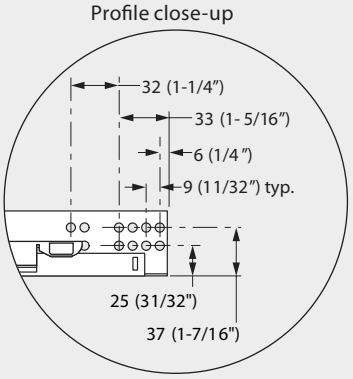

TANDEM plus	TANDEM plus BLUMOTION	Drawer length	Inside cabinet depth with bracket		Profile length	System screw locations	
			Maximum	Minimum		A	B
562H3050C	562H3050B	305 (12")	369 (14-9/16")	326 (12-7/8")	317 (12-1/2")	165 (6-1/2")	261 (10-1/4")
562H3810C	562H3810B	381 (15")	446 (17-9/16")	403 (15-7/8")	394 (15-1/2")	165 (6-1/2")	357 (14-1/16")
562H4570C	562H4570B	457 (18")	522 (20-9/16")	479 (18-7/8")	470 (18-1/2")	261 (10-1/4")	453 (17-13/16")
562H5330C	562H5330B	533 (21")	598 (23-9/16")	555 (21-7/8")	546 (21-1/2")	261 (10-1/4")	517 (20-3/8")

KELLEY,S CABINET SUPPLY, INC.
1019 NORTH COMBEE ROAD
LAKELAND, FL. 33801

(800) 282-3653

KELLEY.S CABINET SUPPLY, INC.
3315 SW 13 ST. UNIT #6
OCALA, FL. 34474

TANDEM PLUS 562F FULL EXTENSION

Overlay application

Description

- Full extension concealed drawer runners
- Available with integrated BLUMOTION
- For 19 (3/4") max. drawer side thickness
- Rear t ilt adjustment
- Concealed roller carriages with permanently lubricated synthetic rollers create a smooth running action
- Locking devices enable easy drawer insertion and removal
- Force guided right side and ± 1.5 (1/16") tolerance compensating left side
- Dynamic weight capacity of 75 lb
- Static weight capacity of 100 lb

Basic components

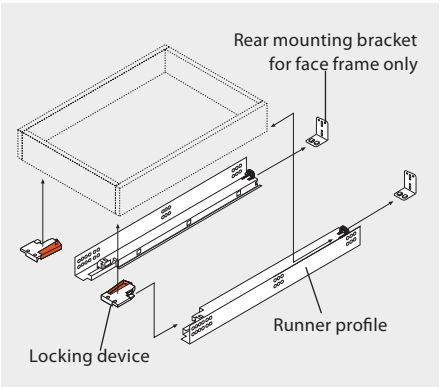

Other applications

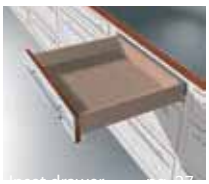

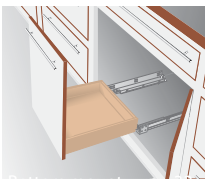

Components

Profile set

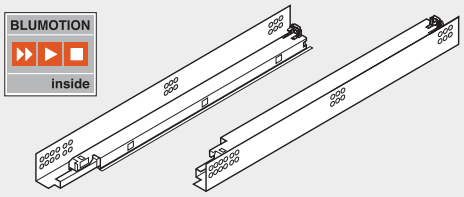

One set required per drawer

For overall cabinet depth	Drawer length	Over extension	TANDEM plus	TANDEM plus BLUMOTION
381 (15")	305 (12")	0	562F3050C	562F3050B
457 (18")	381 (15")	0	562F3810C	562F3810B
533 (21")	457 (18")	6 (1/4")	562F4570C	562F4570B
610 (24")	533 (21")	16 (5/8")	562F5330C	562F5330B

Note: These runners are for 19 (3/4") max. drawer side thickness

Standard locking device

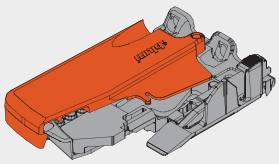

- One right and one left required per drawer
- Minimum interior drawer width 121 (4-3/4")
- Height adjustable +3 (1/8")

Right	T51.1700.04 R
Left	T51.1700.04 L
Installation screws	612TH

page 14

Rear mounting bracket for frame cabinets

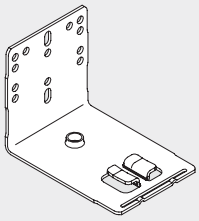

For use when installing TANDEM runners in face frame cabinets. Not necessary for panel cabinet installation.

- Two required per drawer
- Depth and side-to-side self-alignment
- Zinc-plated steel

Non-handed bracket	295.3750
Installation screws	612TH

KELLEY,S CABINET SUPPLY, INC.
1019 NORTH COMBEE ROAD
LAKELAND, FL. 33801

(800) 282-3653

KELLEY.S CABINET SUPPLY, INC.
3315 SW 13 ST. UNIT #6
OCALA, FL. 34474

562F SPECIFICATIONS

Drawer and cabinet specifications

Front view

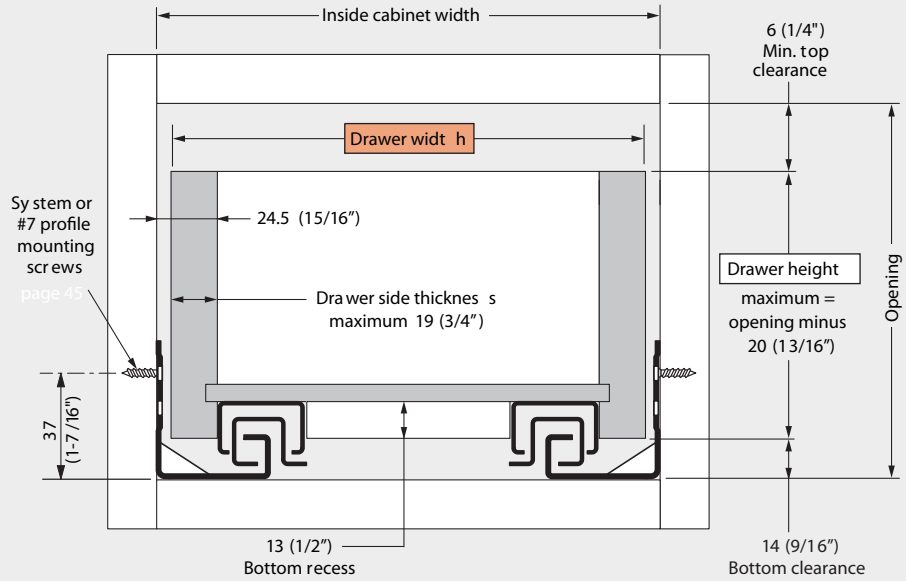

Drawer back preparation

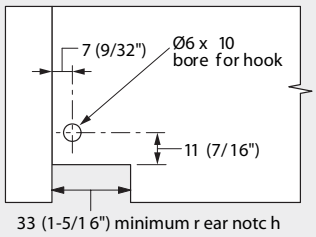

Rear mounting bracket

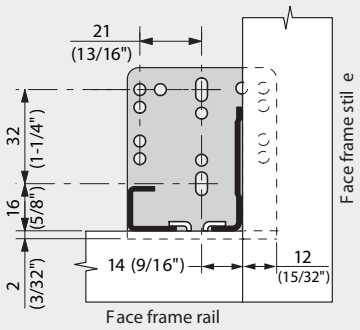

Note: For frame applications.
Minimum 3 screws per bracket.

Formula for calculating outside drawer width			
For drawer side thickness	19 (3/4")	18 (23/32")	17 (21/32")
Deduct from inside cabinet width	11 (7/16")	13 (1/2")	14 (9/16")

Example: For 21" inside cabinet width and a 3/4" thick drawer, 21" minus 7/16" = 20-9/16" drawer width

Profile mounting specifications

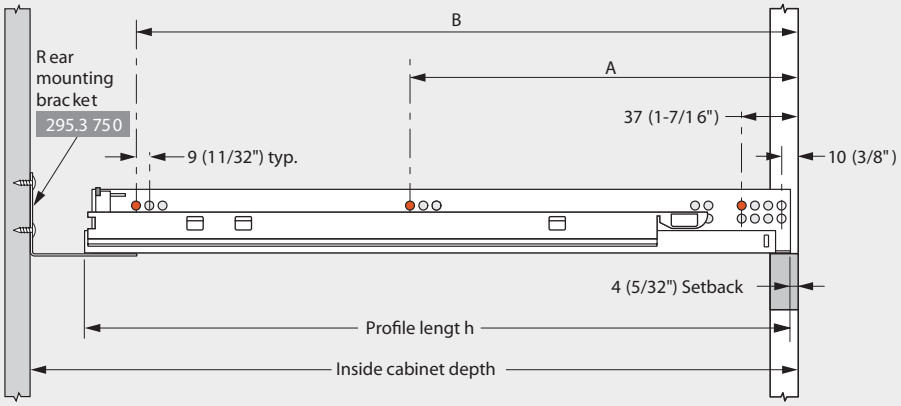

Profile close-up

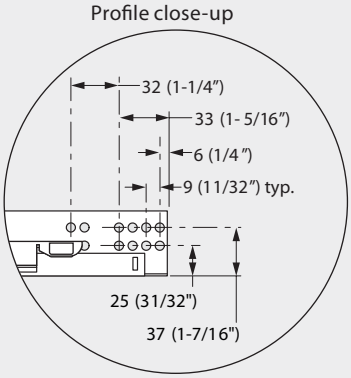

TANDEM plus	TANDEM plus BLUMOTION	Drawer length	Inside cabinet depth with bracket		Profile length	System screw locations	
			Maximum	Minimum		A	B
562F3050C	562F3050B	305 (12")	369 (14-9/16")	326 (12-7/8")	317 (12-1/2")	165 (6-1/2")	261 (10-1/4")
562F3810C	562F3810B	381 (15")	446 (17-9/16")	403 (15-7/8")	394 (15-1/2")	165 (6-1/2")	357 (14-1/16")
562F4570C	562F4570B	457 (18")	522 (20-9/16")	479 (18-7/8")	470 (18-1/2")	261 (10-1/4")	453 (17-13/16")
562F5330C	562F5330B	533 (21")	598 (23-9/16")	555 (21-7/8")	546 (21-1/2")	261 (10-1/4")	517 (20-3/8")

KELLEY,S CABINET SUPPLY, INC.
1019 NORTH COMBEE ROAD
LAKELAND, FL. 33801

(800) 282-3653

KELLEY.S CABINET SUPPLY, INC.
3315 SW 13 ST. UNIT #6
OCALA, FL. 34474

ACCESSORIES

Screws

Deep thread system screws

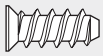

Use to attach cabinet profiles

Pilot bore Ø5 (3/16") hole

13 (1/2"), #2 POZI	661.1300HG
14.5 (9/16"), #2 POZI	661.1450HG

Deep thread wood screws

707N or 7034N to attach cabinet profiles
606N or 606P to attach narrow locking device

#6x5/8", #2 Phillips	606N
#6x5/8", #2 POZI	606P
#7x5/8", #2 Phillips	707N
#7x3/4", #2 Phillips	7034N

Truss head wood screw

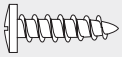

Use to attach locking devices

Pilot bore Ø2.5 (3/32") hole

#6x1/2", truss head	612TH

Bumpers

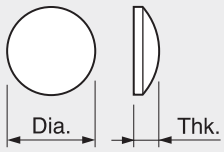

Cushions drawer closing
Self-adhesive back, clear

6(1/4") dia. x 1.5 (1/16")	FX4041
10(3/8") dia. x 3(1/8")	SJ5312

POZI DRIVER and bits

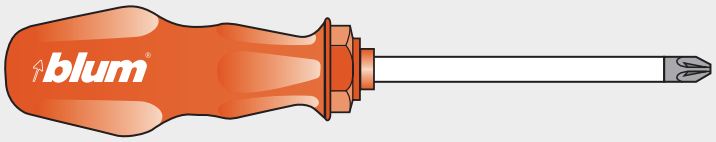

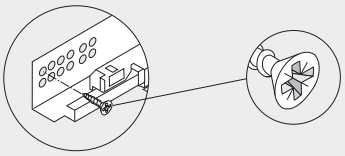

A POZI screwdriver (different from Phil - lips) is the most crucial tool you can use to assure that full torque is applied to all Blum mounting screws. POZI screws can be iden - tified by the distinctive "tick" marks located in the center of the screw head recess.

#2x1" POZI bit insert	POZI BIT #2x1
#2 POZI DRIVER	POZI DRIVER
1/4" bit holder	BIT HOLDER

Universal bracket kit

For bottom mount applications

- Includes (4) brackets
- Includes (8) M4 screws

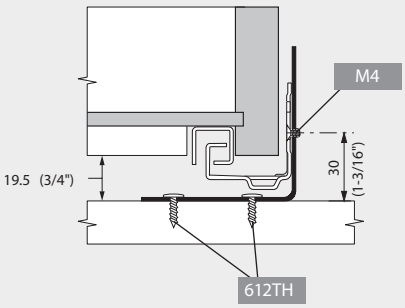

Universal bracket kit	295.4000

Dimensions

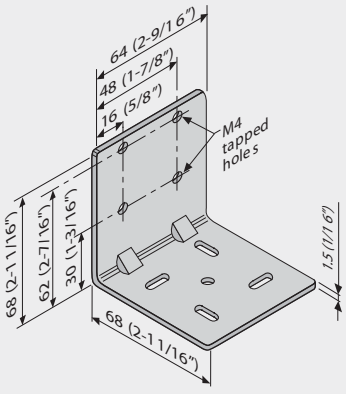

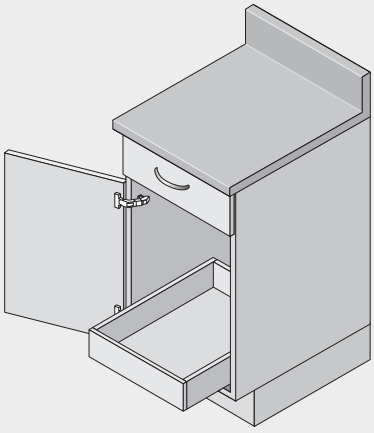

KELLEY,S CABINET SUPPLY, INC.
1019 NORTH COMBEE ROAD
LAKELAND, FL. 33801

(800) 282-3653

KELLEY.S CABINET SUPPLY, INC.
3315 SW 13 ST. UNIT #6
OCALA, FL. 34474

ACCESSORIES

TANDEM end cap

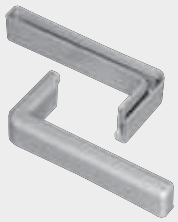

- To cover the front edge of TANDEM cabinet profiles when used in an interior roll-out application
- Can be used with all 562H and 568H and 568. series runners

Right end cap	295.5520
Left end cap	295.5521

Application

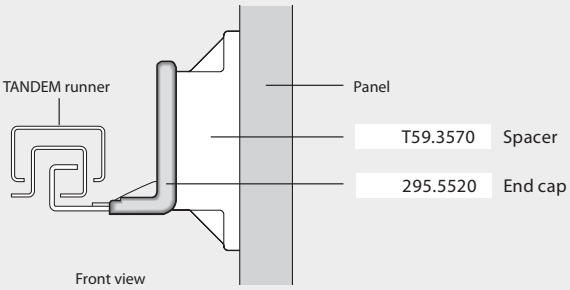

Side spacer

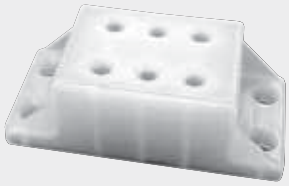

For spacing out TANDEM runners from the cabinet side for clearance on interior roll-outs

Spacer	T59.3570

Application

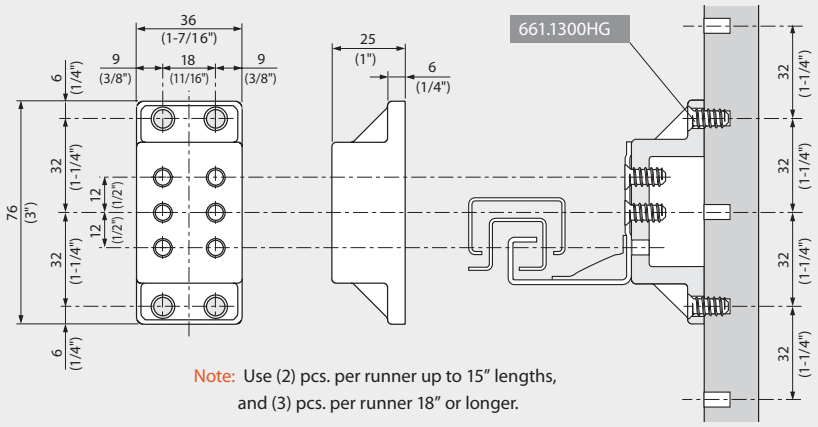

Note: Use (2) pcs. per runner up to 15" lengths, and (3) pcs. per runner 18" or longer.

Drawer front adjuster

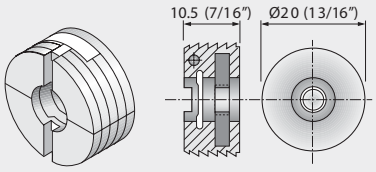

Nylon housing with pre-mounted 8-32 steel nut. For 4-sided drawers. Adjusts height and side-to-side by 5 (3/16").

Drawer front adjuster	295.1000

Using the drawer front adjuster

1

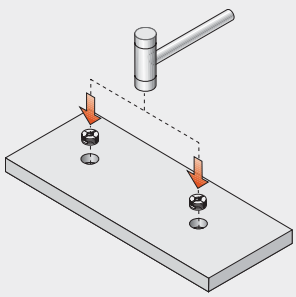

Insert drawer front adjusters manually or with a MINIPRESS insertion ram (MZM.0095)

2

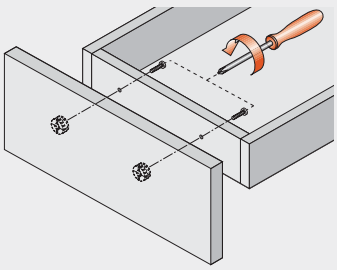

Install and adjust drawer front

KELLEY,S CABINET SUPPLY, INC.
1019 NORTH COMBEE ROAD
LAKELAND, FL. 33801

(800) 282-3653

KELLEY.S CABINET SUPPLY, INC.
3315 SW 13 ST. UNIT #6
OCALA, FL. 34474

ASSEMBLY AIDS

TANDEM template

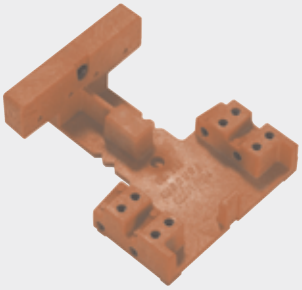

- Essential tool for drawers using TANDEM runners
- To bore the Ø6mm holes for rear hooks
- To pilot bore Ø2.5mm hole for TANDEM locking devices at 12° angle

TANDEM template	T65.1000.02
Accessories (order separately)	
Ø2.5mm drill bit	DB-2.5mm
Ø6mm drill bit	DB-6mm
Tool set	T65.9000

Using the TANDEM template

1

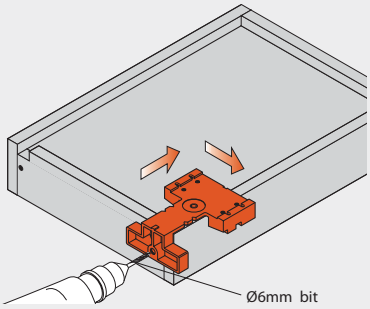

Bore rear fixing holes.

2

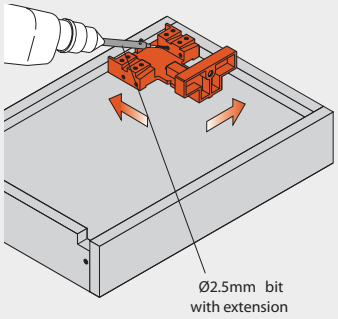

Bore pilot holes for locking device screws.

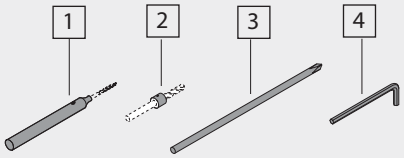

Tool set

1. Ø2.5mm drill bit extension
2. Ø6mm stop collar
3. Screwdriver tip
4. Allen key

Drawer front adjuster marking gauge

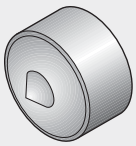

For marking center holes for knock-in drawer front adjusters.

For wooden 4-sided drawers.

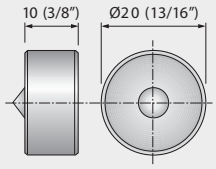

Marking gauge	65.2950.10

Using the marking gauge

1

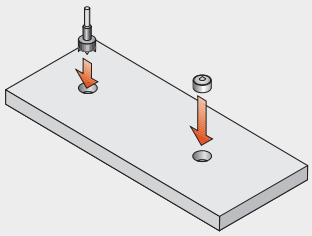

Bore for front adjusters. Insert marking gauges into drawer front.

2

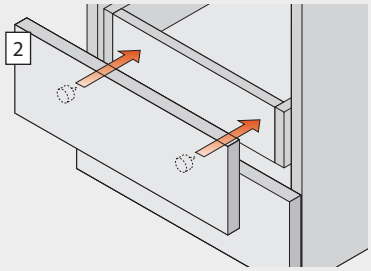

Align the drawer front to make marks in the drawer box.

3

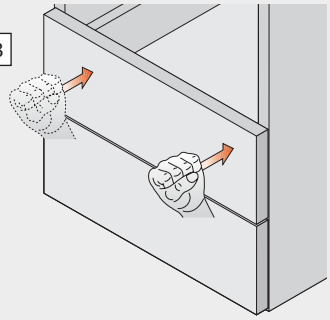

Mark fixing positions with a light tap onto the drawer front.

4

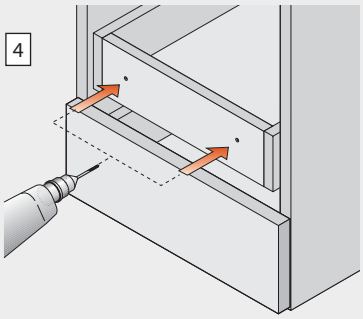

Drill Ø5 (3/16") holes through the drawer box.

KELLEY,S CABINET SUPPLY, INC.
1019 NORTH COMBEE ROAD
LAKELAND, FL. 33801

(800) 282-3653

KELLEY.S CABINET SUPPLY, INC.
3315 SW 13 ST. UNIT #6
OCALA, FL. 34474

STANDARD DRAWER RUNNER PROGRAM

230M Single extension, BLUMATIC self-closing drawer runners

Lengths: **250mm** (10") to **650mm** (26")

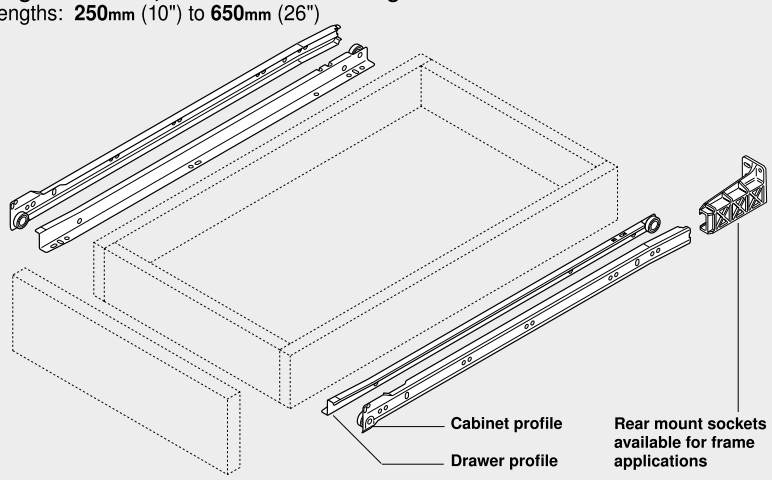

230E Single extension drawer runners with stay-closed detents

Lengths: **700mm** (28") to **800mm** (32")

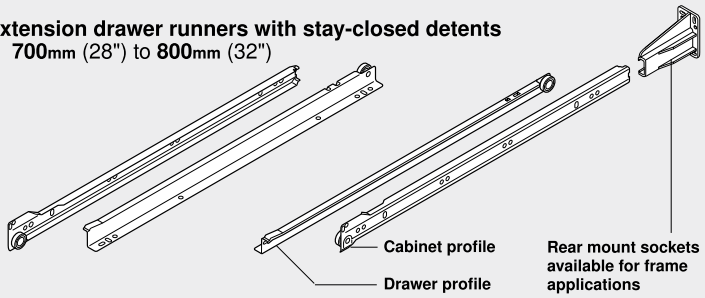

430E Full extension drawer runners with stay-closed detents

Lengths: **250mm** (10") to **800mm** (32")

NOTE: No rear mount sockets available for 430 series. For frame cabinets, block out behind cabinet profiles.

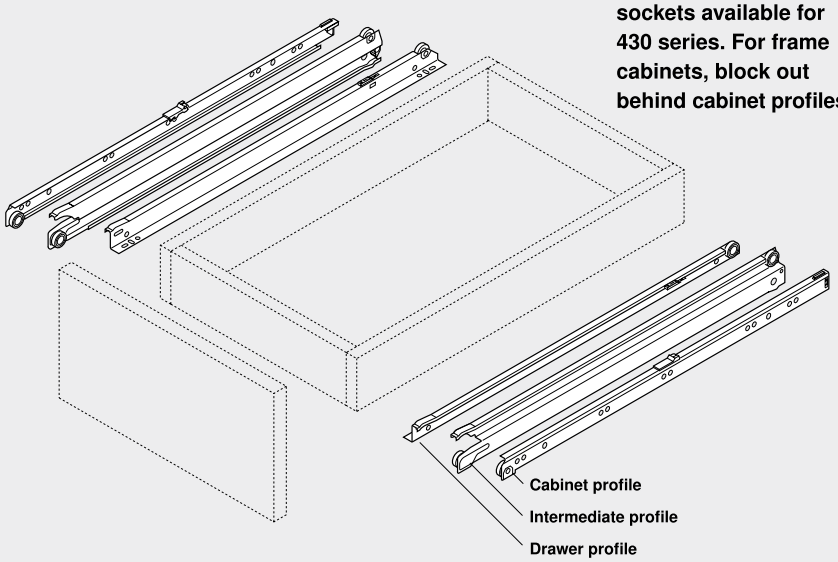

230 series drawer runners

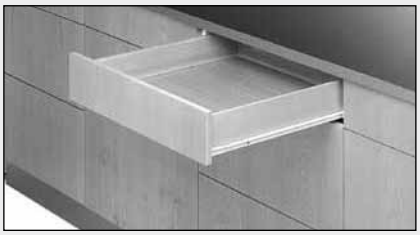

- Single extension, bottom mounted
- Durable epoxy coating in cream or white
- Smooth running synthetic rollers on tempered steel axles

- Captive RH profiles/tolerance LH profiles
- 1/2" side clearance
- Double warning lift out stop

230M series have BLUMATIC self-closing action. Angled drawer and cabinet profiles create a parallel drop 3/32".

230E series have stay-closed detents in the drawer profiles that hold the drawer in the closed position.

430 series drawer runners

- Full extension, bottom mounted
- Durable epoxy coating in cream or white
- Smooth running synthetic rollers on tempered steel axles
- Double captive profiles
- 1/2" side clearance
- Lock out stops to prevent drawer removal
- Intermediate profiles lock out for easy drawer installation
- 1-1/4" over extension
- Detents in the drawer and intermediate profiles hold the drawer closed

Millimeter to inch equivalents

1	1.5	2	3	4	5	5.5	6	7	8	9	9.5	10	11	12	13	13.5	14	15	16	17	17.5	18	19	20	20.5	21	22	23	24	24.5	25.4
1/32	1/16	3/32	1/8	5/32	3/16	7/32	1/4	9/32	5/16	11/32	3/8	13/32	7/16	15/32	1/2	17/32	9/16	19/32	5/8	21/32	11/16	23/32	3/4	25/32	13/16	27/32	7/8	29/32	15/16	31/32	1

KELLEY,S CABINET SUPPLY, INC.
1019 NORTH COMBEE ROAD
LAKELAND, FL. 33801

(800) 282-3653

KELLEY.S CABINET SUPPLY, INC.
3315 SW 13 ST. UNIT #6
OCALA, FL. 34474

STANDARD 230M SERIES

Bottom mounted single extension drawer runners

Specifications

Runner	Nominal Length	Frame Cabinet Interior Depth*		Minimum Panel Cabinet Interior Depth*	Suggested Drawer Length	Extension Loss**	Cabinet & Drawer Profile Length
	Inches	Maximum	Minimum				
230M6500	26"	714 (28 1/8")	677 (26 11/16")	653 (25 3/4")	650 (25 5/8")	127 (4 15/16")	650 (25 5/8")
230M6000	24"	664 (26 1/8")	627 (24 11/16")	603 (23 3/4")	600 (23 5/8")	120 (4 11/16")	600 (23 5/8")
230M5500	22"	614 (24 3/16")	577 (22 3/4")	553 (21 13/16")	550 (21 11/16")	110 (4 5/16")	550 (21 11/16")
230M5000	20"	564 (22 3/16")	527 (20 3/4")	503 (19 13/16")	500 (19 11/16")	102 (4")	500 (19 11/16")
230M4500	18"	514 (20 1/4")	477 (18 13/16")	453 (17 7/8")	450 (17 3/4")	95 (3 3/4")	450 (17 3/4")
230M4000	16"	464 (18 1/4")	427 (16 13/16")	403 (15 7/8")	400 (15 3/4")	85 (3 3/8")	400 (15 3/4")
230M3500	14"	414 (16 1/4")	377 (14 13/16")	353 (13 7/8")	350 (13 3/4")	85 (3 3/8")	350 (13 3/4")
230M3000	12"	364 (14 5/16")	327 (12 7/8")	303 (11 15/16")	300 (11 13/16")	85 (3 3/8")	300 (11 13/16")
230M2500	10"	314 (12 5/16")	277 (10 7/8")	253 (9 15/16")	250 (9 13/16")	59 (2 5/16")	250 (9 13/16")

* **For overlay drawer fronts.** Space requirements for inset drawers will vary according to front thickness. **A trial is recommended.**
** **At suggested drawer length.**

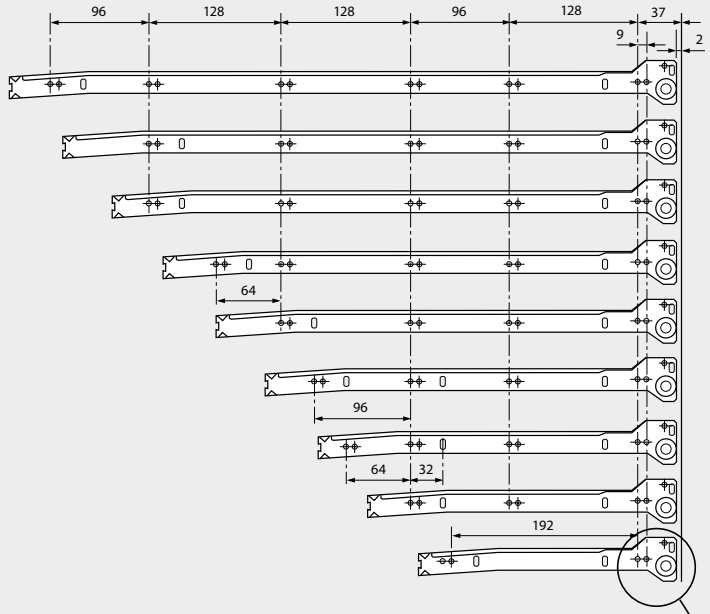

Colors:
White or R901 cream

230M6500 (26")
230M6000 (24")
230M5500 (22")
230M5000 (20")
230M4500 (18")
230M4000 (16")
230M3500 (14")
230M3000 (12")
230M2500 (10")

230M Rear Mount Socket

Part No.	
602320	L&R set
602300	RH socket
602301	LH socket

IMPORTANT: The Blumatic design lowers the drawer into the closed position. Consult the minimum reveal table to make sure the drawer front clears the countertop overhang when the drawer opens.

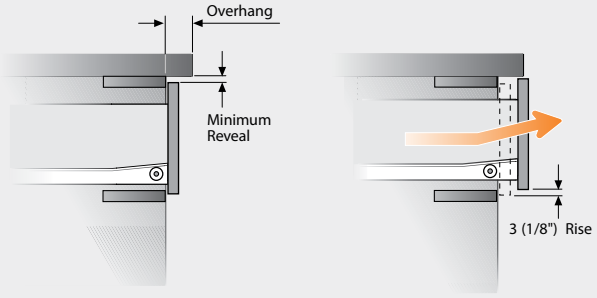

Overhang	16 (5/8")	32 (11/4")	48 (17/8")
Minimum Reveal	1 (1/32")	2 (3/32")	3 (1/8")

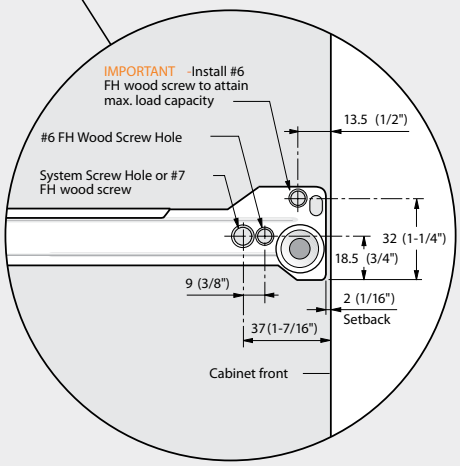

KELLEY,S CABINET SUPPLY, INC.
1019 NORTH COMBEE ROAD
LAKELAND, FL. 33801

(800) 282-3653

KELLEY.S CABINET SUPPLY, INC.
3315 SW 13 ST. UNIT #6
OCALA, FL. 34474

230M SPECIFICATIONS

Drawer and cabinet specifications

Frame Cabinet Installation

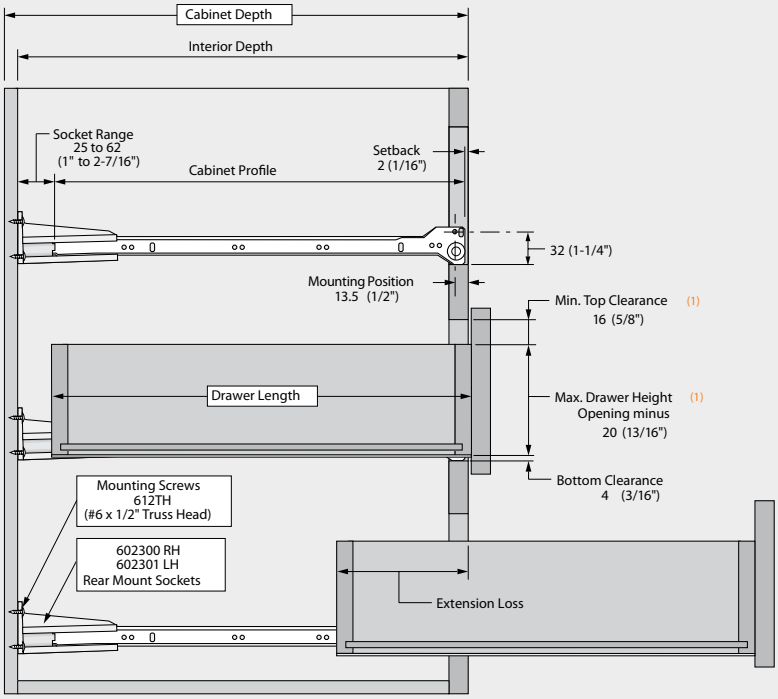

Panel Cabinet Installation

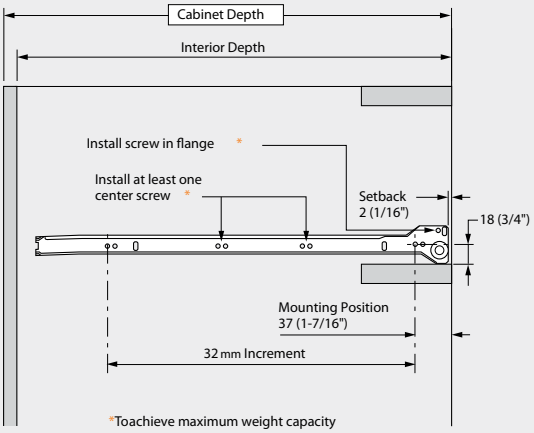

*Toachieve maximum weight capacity

Drawer Profile Mounting

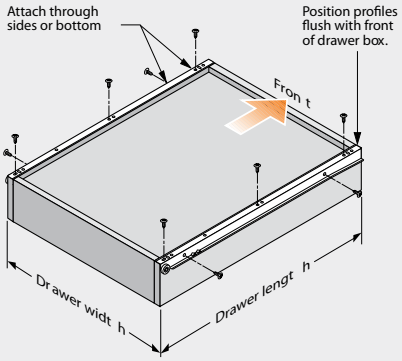

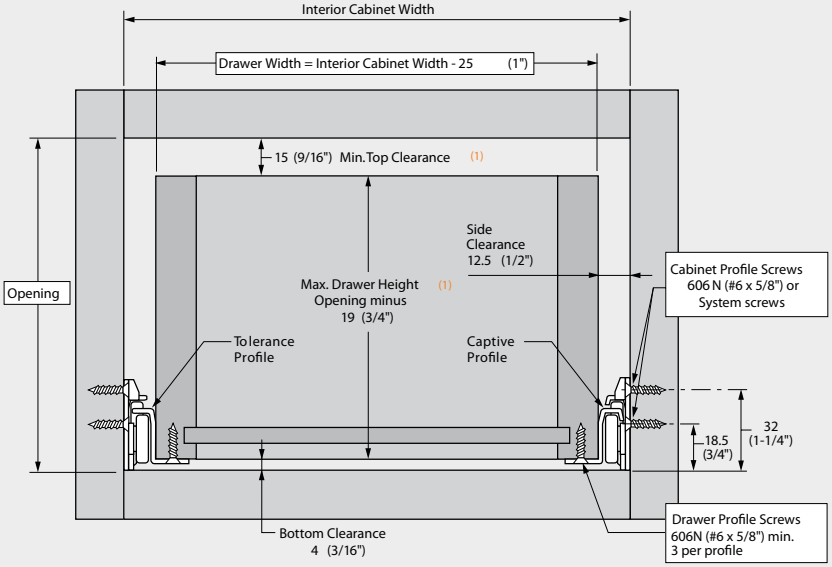

Rear Mount Socket Location

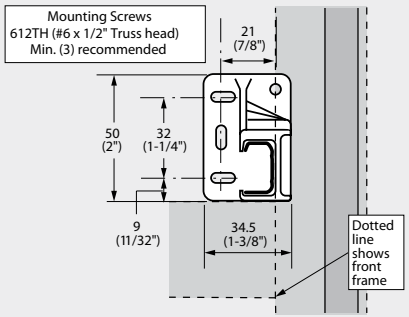

(1) Minimum top clearance and maximum drawer height when drawer is of recommended length and tilting to remove is not desired.

KELLEY,S CABINET SUPPLY, INC.
1019 NORTH COMBEE ROAD
LAKELAND, FL. 33801

(800) 282-3653

KELLEY.S CABINET SUPPLY, INC.
3315 SW 13 ST. UNIT #6
OCALA, FL. 34474

STANDARD 430E SERIES

Bottom mounted full extension drawer runners

Specifications

Runner	Nominal Length Inches	Minimum Interior Cabinet Depth	Suggested Drawer Length	Over Extension	Cabinet & Drawer Profile Length
430E8000	32"	803 (31 5/8")	800 (31 1/2")	30 (1-3/16") At suggested drawer length	800 (31 1/2")
430E7500	30"	753 (29 5/8")	750 (29 1/2")		750 (29 1/2")
430E7000	28"	703 (27 11/16")	700 (27 9/16")		700 (27 9/16")
430E6500	26"	653 (25 3/4")	650 (25 5/8")		650 (25 5/8")
430E6000	24"	603 (23 3/4")	600 (23 5/8")		600 (23 5/8")
430E5500	22"	553 (21 13/16")	550 (21 11/16")		550 (21 11/16")
430E5000	20"	503 (19 13/16")	500 (19 11/16")		500 (19 11/16")
430E4500	18"	453 (17 7/8")	450 (17 3/4")		450 (17 3/4")
430E4000	16"	403 (15 7/8")	400 (15 3/4")		400 (15 3/4")
430E3500	14"	353 (13 7/8")	350 (13 3/4")		350 (13 3/4")
430E3000	12"	303 (11 15/16")	300 (11 13/16")		300 (11 13/16")
430E2500	10"	253 (9 15/16")	250 (9 13/16")		250 (9 13/16")

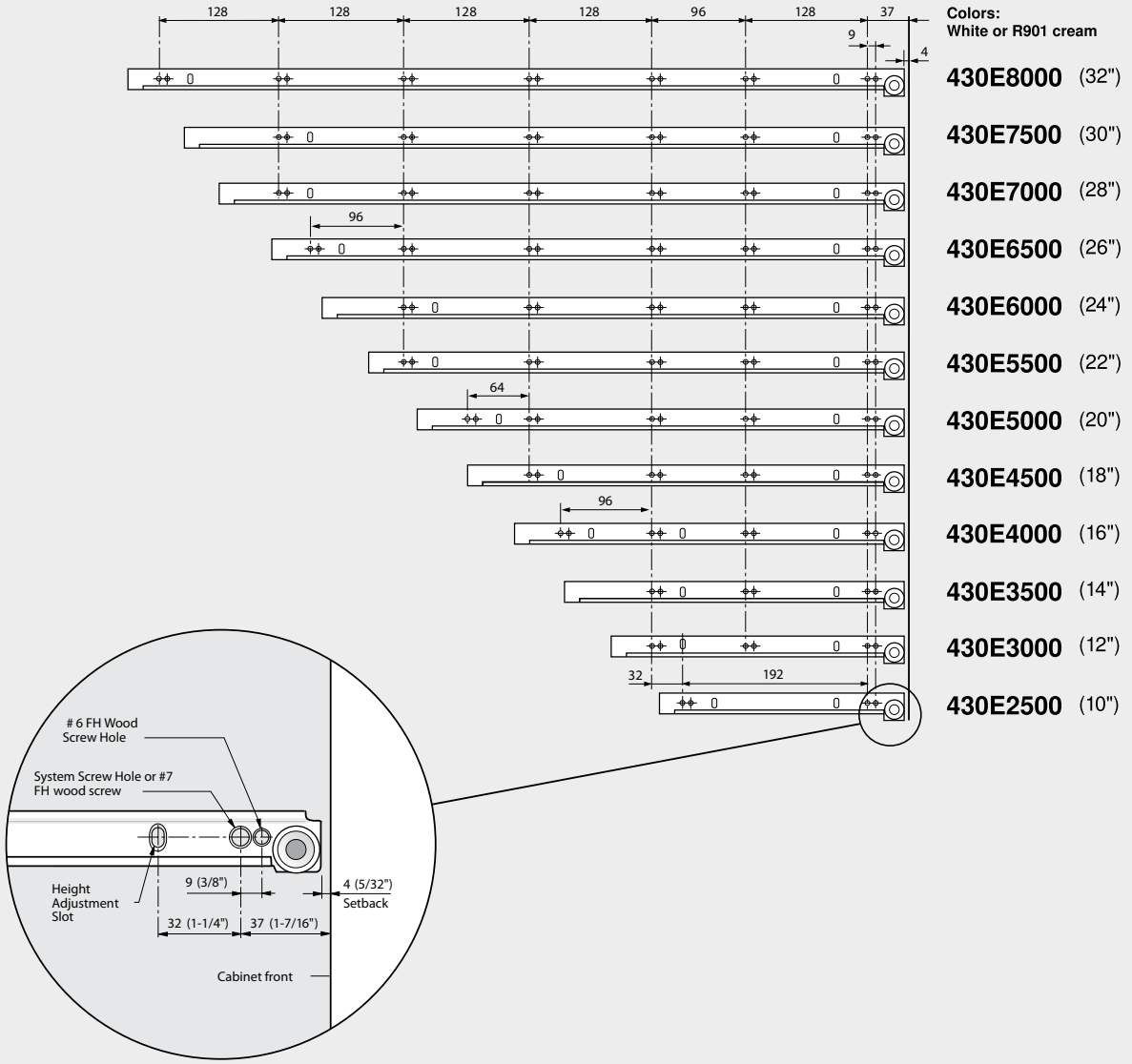

KELLEY,S CABINET SUPPLY, INC.
1019 NORTH COMBEE ROAD
LAKELAND, FL. 33801

(800) 282-3653

KELLEY.S CABINET SUPPLY, INC.
3315 SW 13 ST. UNIT #6
OCALA, FL. 34474

430E SPECIFICATIONS

Drawer and cabinet specifications

Panel Cabinet Installation

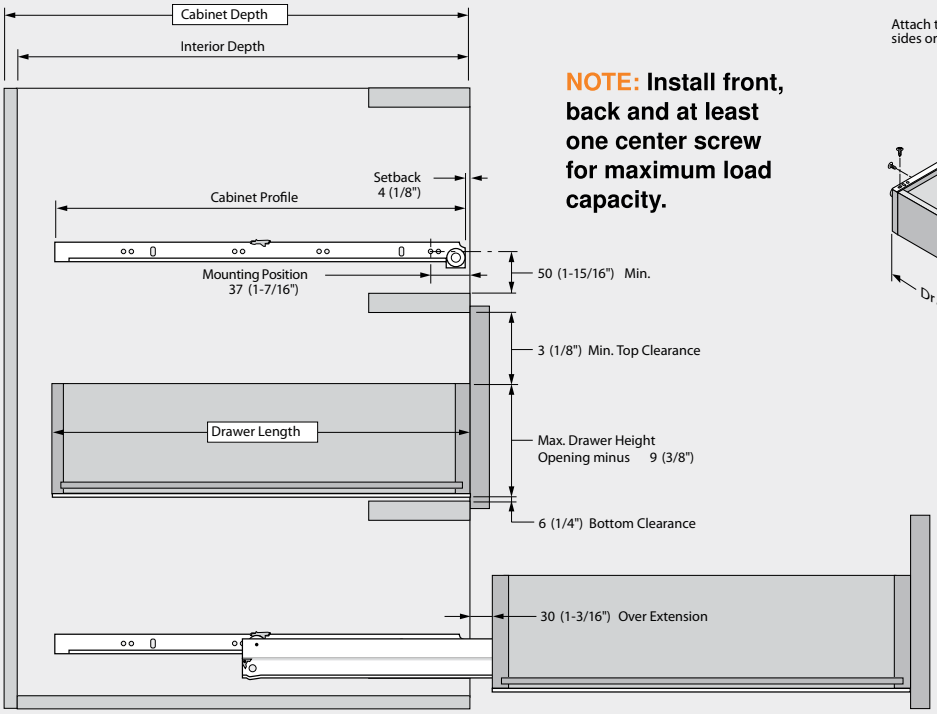

NOTE: Install front, back and at least one center screw for maximum load capacity.

Drawer Profile Mounting

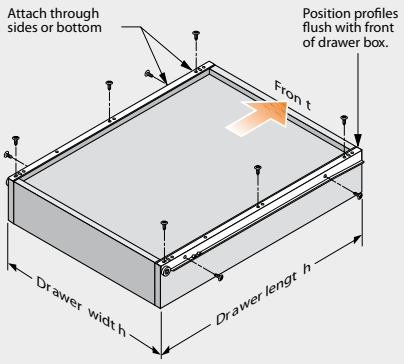

NOTE: No rear mount sockets available for 430 series. For frame cabinets, block out under cabinet profiles.

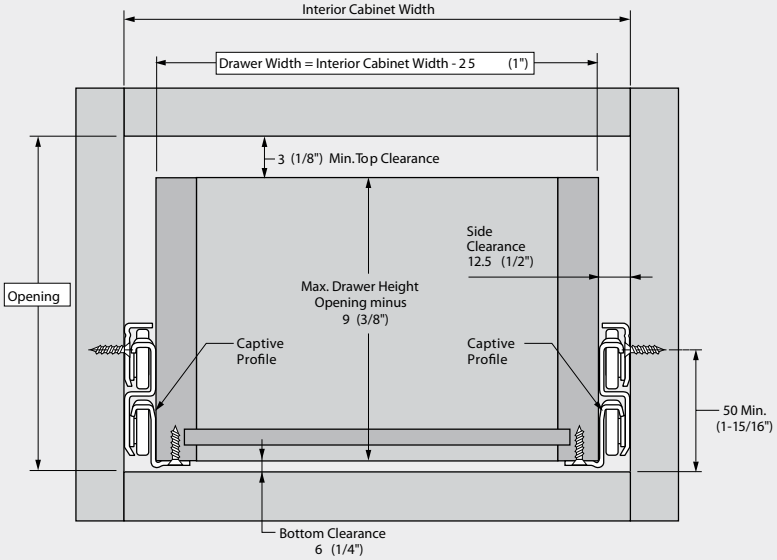

KELLEY,S CABINET SUPPLY, INC.
1019 NORTH COMBEE ROAD
LAKELAND, FL. 33801

(800) 282-3653

KELLEY.S CABINET SUPPLY, INC.
3315 SW 13 ST. UNIT #6
OCALA, FL. 34474

430E ASSEMBLY INSTRUCTIONS

Assembly of bottom mounted full extension drawer runners

Cabinet and drawer profile assembly

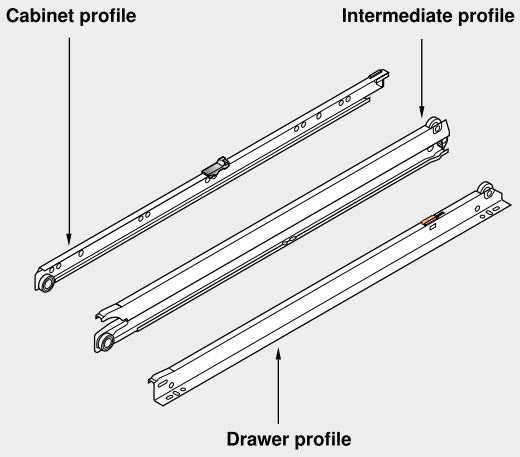

430E Series Profiles (LH)

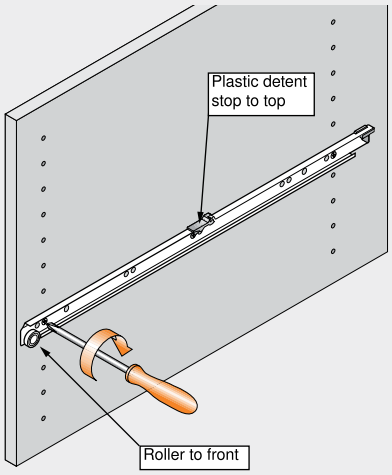

1. Mount cabinet profile to side panel

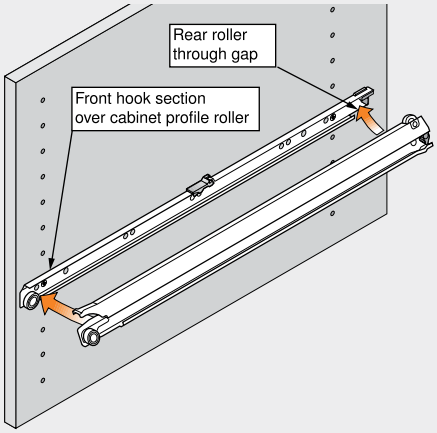

2. Install intermediate profile

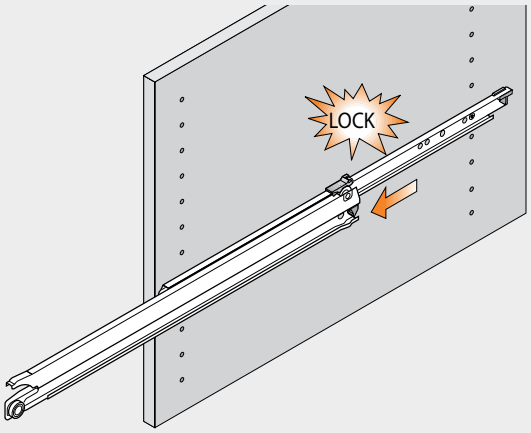

3. Slide intermediate profile to lock into position

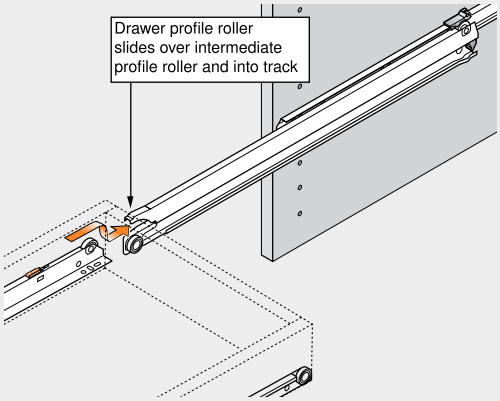

4. Install drawer profile

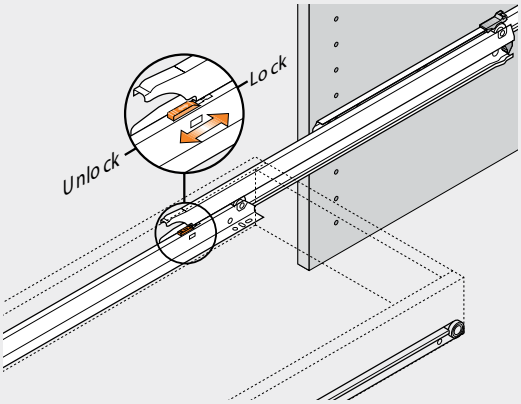

5. Engage drawer removal lock

KELLEY,S CABINET SUPPLY, INC.
1019 NORTH COMBEE ROAD
LAKELAND, FL. 33801

(800) 282-3653

KELLEY.S CABINET SUPPLY, INC.
3315 SW 13 ST. UNIT #6
OCALA, FL. 34474

STANDARD RUNNER ACCESSORIES

Rear mount sockets for 230M and 230E runners in frame cabinets

Synthetic, neutral color

Attach with Blum 612TH screws, #6 x 1/2" trusshead

Cannot be used with 430 full extension series

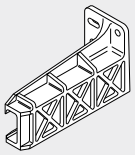

	Part No.
230M RH & LH Socket Set	602320
230M RH	602300
230M LH	602301

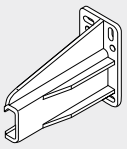

	Part No.
230E RH & LH Socket Set	601962-VH21
230E RH	601960
230E LH	601961

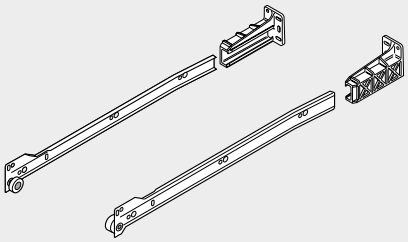

Cabinet profile spacers

To space runners away from the cabinet side to clear door protrusion on interior roll-out trays.

Two thicknesses available that can be stacked up to **24** (15/16")

Synthetic, neutral color

	Part No.
(A) **8** (5/16") with **Ø5** (3/16") **x 11 dowel for linebore mounting**	320M0188
(B) **4** (5/32") **stackable**	320M0048
(C) **8** (5/16") **stackable**	320M0088

Heavy duty spacer
Synthetic, neutral color

(D) **32** (1-1/4") x **19** (3/4")	602750

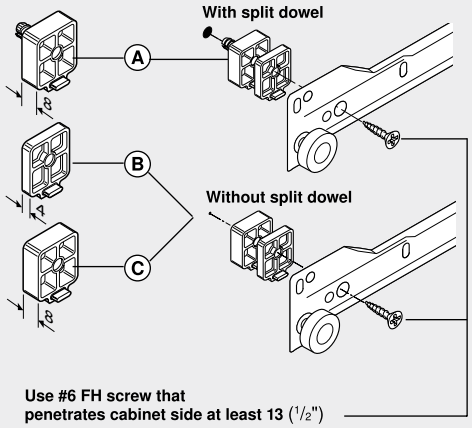

Use #6 FH screw that penetrates cabinet side at least 13 (1/2")

Heavy duty spacer

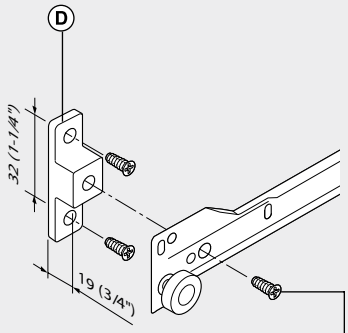

Use 3 deep thread system screws to attach runner to spacer and spacer to cabinet side

Important: Use spacers on front, middle and rear of each cabinet profile for adequate support.

Door protectors

For pull-out surrounds to prevent damage to doors.

Fixed to the underside of the drawer. For 230M and 430E runners. Symmetrical. Epoxy coated steel, with synthetic rollers, cream color.

	Part No.
Door protector	298.2200

Space requirements

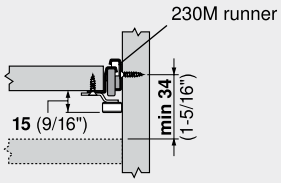

Assembly

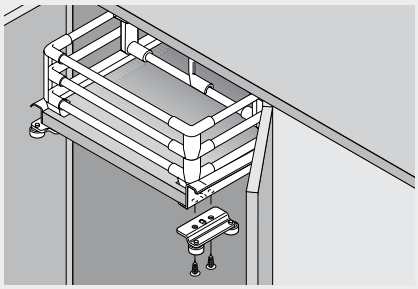

Screws and bumpers

Deep thread wood screws
Nickel plated

	Part No.
#6 x 5/8", **#2 Phillips**	606N
#6 x 5/8", **#2 POZI**	606P

Zinc plated

	Part No.
#6 x 1/2", **#2 Phillips**	612TH

Deep thread system screws
Pilot bore **Ø5** (3/16") hole
Nickel plated

	Part No.
11.5 (7/16"), #2 POZI	661.1150
13 (1/2"), #2 POZI	661.1300

Drawer bumper stops
Cushions drawer closing
Self-adhesive back, clear

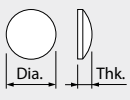

	Part No.
6 (1/4") dia. x **1.5** (1/16") thk.	FX4041
10 (3/8") dia. x **3** (1/8") thk.	SJ5312

KELLEY,S CABINET SUPPLY, INC.
1019 NORTH COMBEE ROAD
LAKELAND, FL. 33801

(800) 282-3653

KELLEY.S CABINET SUPPLY, INC.
3315 SW 13 ST. UNIT #6
OCALA, FL. 34474

ASSEMBLY TOOLS

MINIFIX

For precise positioning of cabinet profile fixing screws.

For 230M and 230E runners

MINIFIX

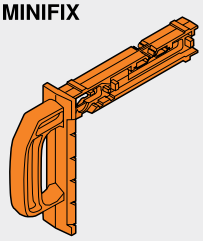

Part No.
65.3300

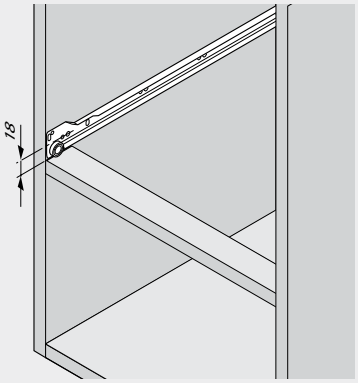

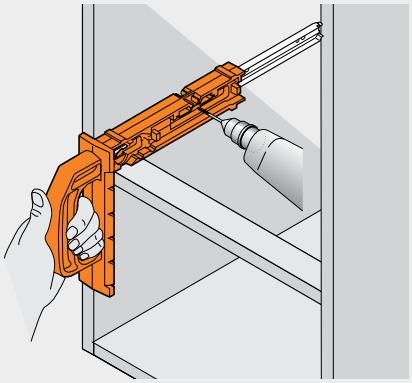

Drawer front adjusters and marking gauge

Drawer front adjuster

Nylon housing with pre-mounted 8-32 steel nut. For 4-sided drawers. Adjusts height and side-to-side by **5** (3/16").

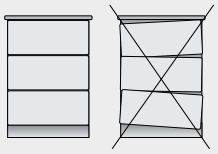

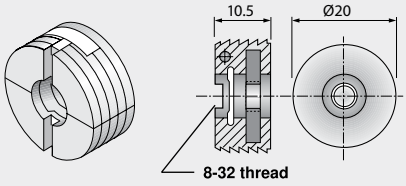

Part No.

Drawer front adjuster 295.1000

MINIPRESS Ram MZM.0095

Ø20 rt handed drill bit M0I.ZB20.02 RH

Marking gauge

For marking center holes for knock-in drawer front adjusters, 295.1000.

For wooden 4-sided drawers.

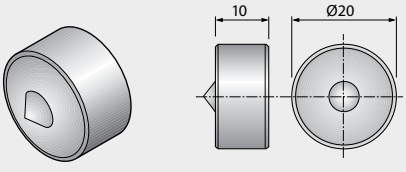

Marking gauge Part No. **65.2950**

Installation of drawer front adjuster using marking gauges

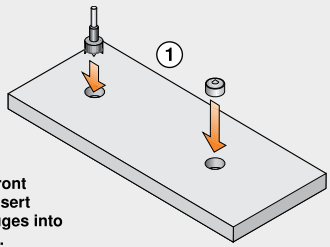

1. Bore for front adjusters. Insert marking gauges into drawer front.

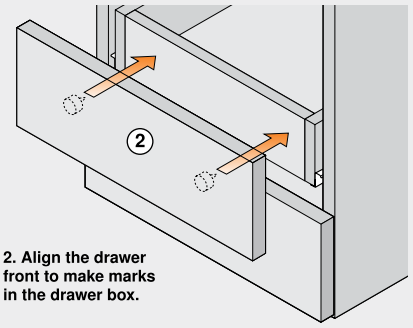

2. Align the drawer front to make marks in the drawer box.

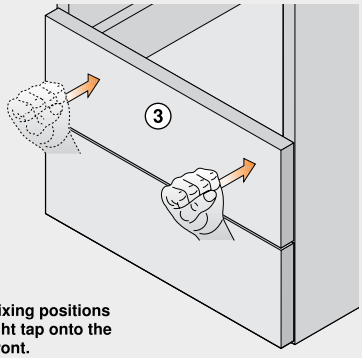

3. Mark fixing positions with a light tap onto the drawer front.

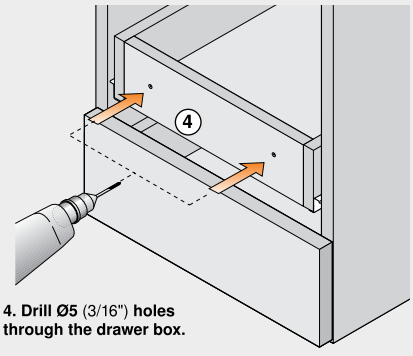

4. Drill Ø5 (3/16") holes through the drawer box.

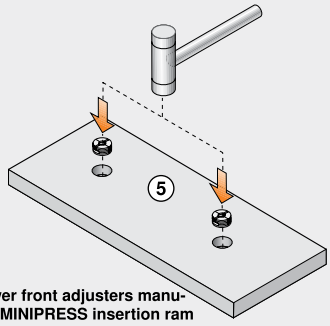

5. Insert drawer front adjusters manually or with a MINIPRESS insertion ram (MZM.0095)

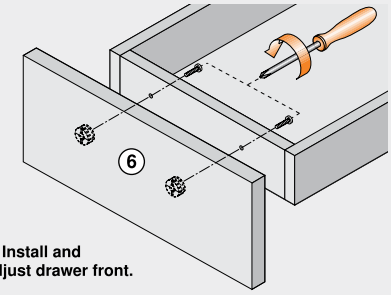

6. Install and adjust drawer front.

KELLEY,S CABINET SUPPLY, INC.
1019 NORTH COMBEE ROAD
LAKELAND, FL. 33801

(800) 282-3653

KELLEY.S CABINET SUPPLY, INC.
3315 SW 13 ST. UNIT #6
OCALA, FL. 34474

SPECIAL APPLICATIONS

Standard Series with roll-out tray mounted to Blum Universal Drawer Brackets

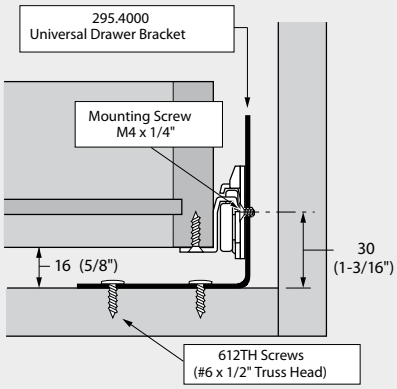

Roll-out tray with 230M runner

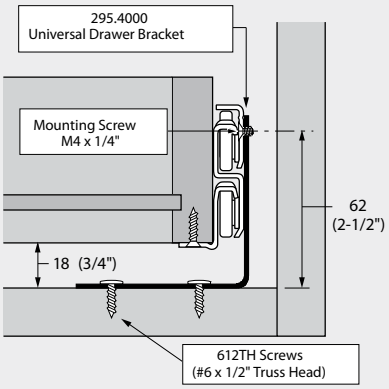

Roll-out tray with 430E runner

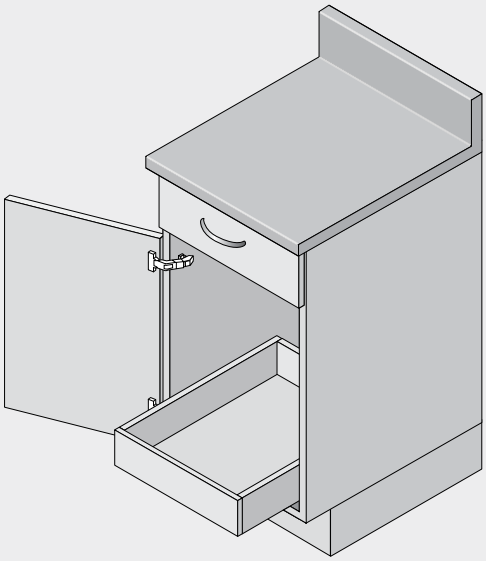

For mounting Blum runners to the floor of a cabinet (roll-out tray).

Attach to cabinet with Blum 612TH screws, (#6 x 1/2" trusshead)

Zinc coated

(4) per set with M4 screws

	Part No.
Universal bracket kit	**295.4000**

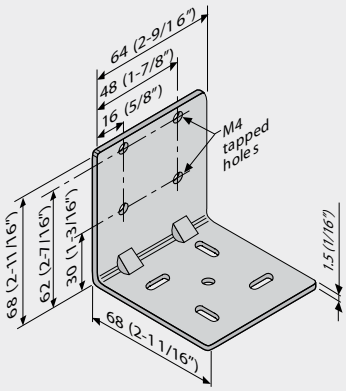

POZI screwdriver and bits – a critical tool in full torque application

A POZI screwdriver (different from Phillips) is the most crucial tool you can use to assure that full torque is applied to all Blum adjustment screws.

	Part No.
Hand screwdriver **#2 POZI DRIVER**	**POZI DRIVER**
1/4" Hex drive for power drivers **Magnetic bit holder**	**BIT HOLDER**
#2 x 1 x 1/4" **POZI drive insert**	**POZI BIT #2x1**
#2 x 2 x 1/4" **POZI drive insert**	**POZI BIT #2x2**

POZI screws can be identified by the distinctive "tick" marks located in the center of the screwhead recess.

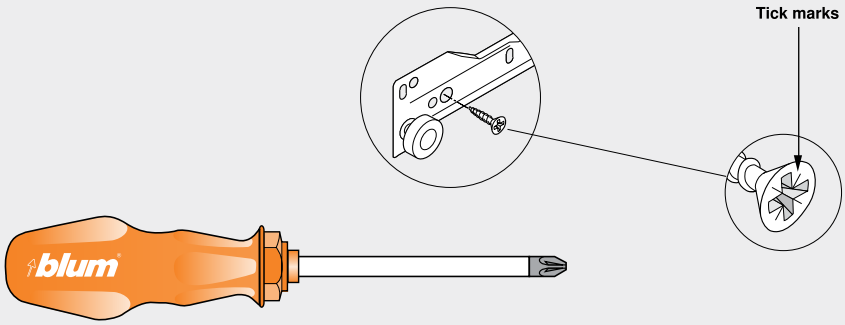

KELLEY,S CABINET SUPPLY, INC.
1019 NORTH COMBEE ROAD
LAKELAND, FL. 33801

(800) 282-3653

KELLEY.S CABINET SUPPLY, INC.
3315 SW 13 ST. UNIT #6
OCALA, FL. 34474

NOTES

METABOX GENERAL SPECIFICATIONS

Cabinet types and capacity

The METABOX drawer system can be installed in either panel or face-frame con - structed cabinets with optional rear mount - ing sockets.

METABOX drawers have a static load capacity of 100 pounds and a dynamic capacity of 75 pounds and are tested to perform 100,000 open/close cycles without failure.

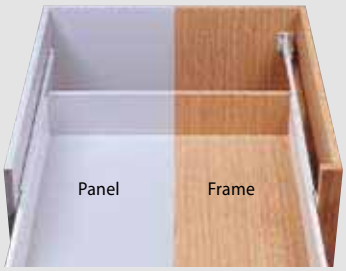

METABOX drawers install in all cabinets

Example of METABOX load capacity

Available heights and colors

METABOX is available in four drawer heights, offering a multitude of design options. “C” drawers are available in cream or white, while “C15” drawers are available in white only.

White

Cream

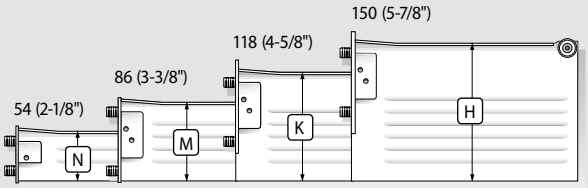

Opening and closing information

BLUMATIC self-closing action results from the angled drawer and cabinet profiles.

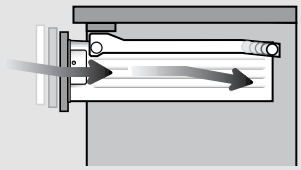

320 series 3/4 extension drawers have an extension loss when fully opened.

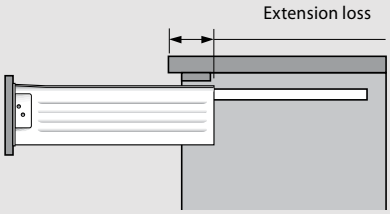

330 series full extension drawers have an over extension of 18 (3/4") when fully opened.

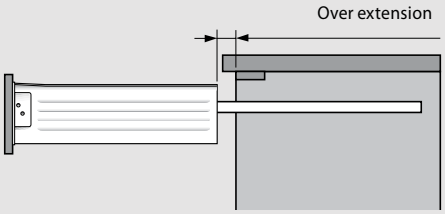

“C” version and the “C15” version

Assembling METABOX “C” drawers is quick and easy.

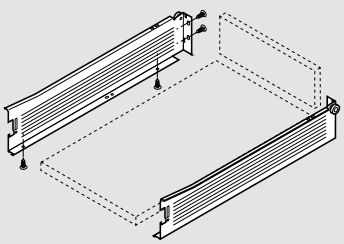
METABOX “C” version

METABOX “C15” drawers can be manually assembled , or with the METABOX drilling guide

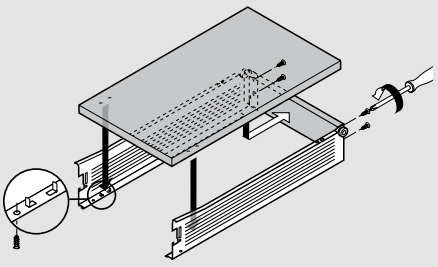
METABOX “C15” version

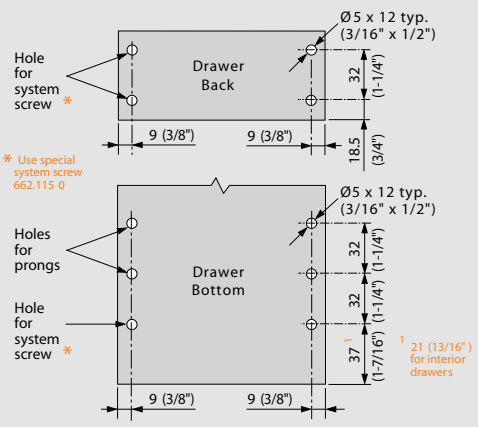

Boring for C15 drawer back and bottom
(for 13 (1/2") material, holes are 10 (3/8") deep)

KELLEY,S CABINET SUPPLY, INC.
1019 NORTH COMBEE ROAD
LAKELAND, FL. 33801

(800) 282-3653

KELLEY.S CABINET SUPPLY, INC.
3315 SW 13 ST. UNIT #6
OCALA, FL. 34474

METABOX 320N DRAWER SERIES

Drawer components

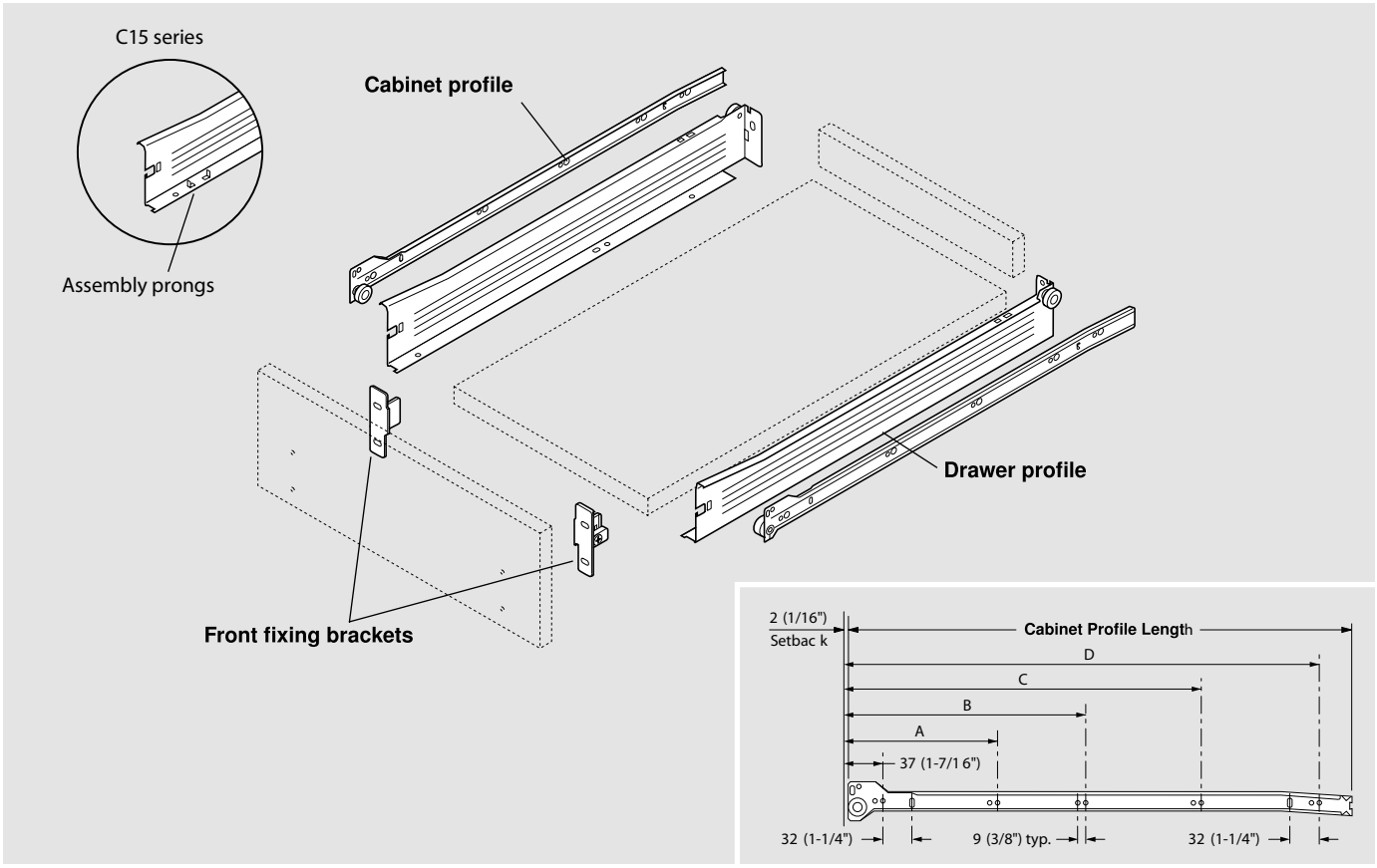

Runner sets (includes cabinet and drawer profiles)

C15 series white	Nominal Length	Min. cabinet Inside depth	Cabinet & drawer **Profile length**	System screw mounting hole positions			
				A	B	C	D
320N5500C15	(22")	557 (21-7/8")	550 (21-5/8")	165 (6-1/2")	261 (10-1/4")	389 (15-5/16")	517 (20-3/8")
320N5000C15	(20")	507 (19-15/16")	500 (19-11/16")	165 (6-1/2")	261 (10-1/4")	389 (15-5/16")	453 (17-13/16")
320N4500C15	(18")	457 (17-15/16")	450 (17-11/16")	165 (6-1/2")	261 (10-1/4")	389 (15-5/16")	-
320N4000C15	(16")	407 (16")	400 (15-3/4")	165 (6-1/2")	261 (10-1/4")	357 (14-1/16")	-
320N3500C15	(14")	357 (14")	350 (13-3/4")	165 (6-1/2")	261 (10-1/4")	325 (12-13/16")	-
	(11")	277 (10-7/8")	270 (10-5/8")	229 (9")	-	-	-

Standard front fixing bracket

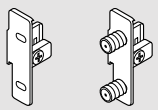

Nickel-plated steel

Screw-on	ZSF.1510.04	Right
	ZSF.1510.05	Left
Press-in	ZSF.1610.04	Right
	ZSF.1610.05	Left

KELLEY,S CABINET SUPPLY, INC.
1019 NORTH COMBEE ROAD
LAKELAND, FL. 33801

(800) 282-3653

KELLEY.S CABINET SUPPLY, INC.
3315 SW 13 ST. UNIT #6
OCALA, FL. 34474

METABOX 320N SPECIFICATIONS

Component specifications

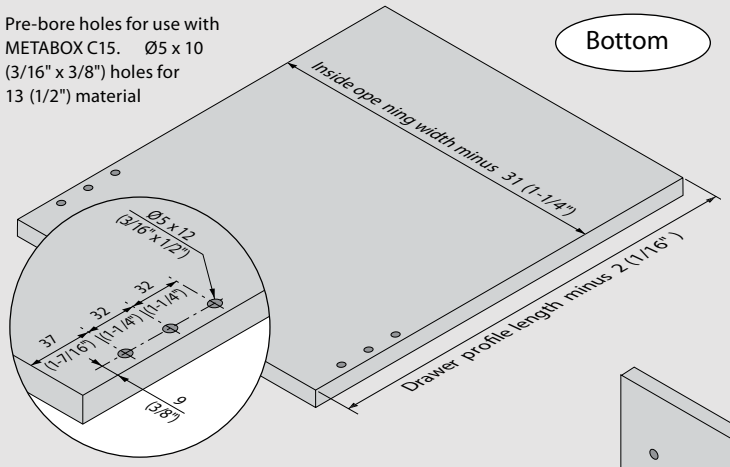

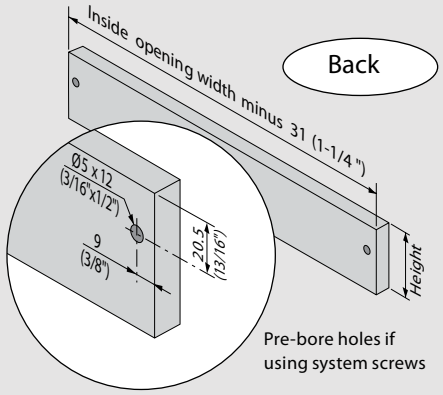

Pre-bore holes if using system screws

Profile length	Bottom length
550 (21-5/8")	548 (21-9/16")
500 (19-11/16")	498 (19-5/8")
450 (17-11/16")	448 (17-5/8")
400 (15-3/4")	398 (15-11/16")
350 (13-3/4")	348 (13-11/16")
270 (10-5/8")	268 (10-9/16")

Drawer bottom thickness	Back height
13 (1/2")	42 (1-5/8")
16 (5/8")	39 (1-9/16")
19 (3/4")	36 (1-7/16")

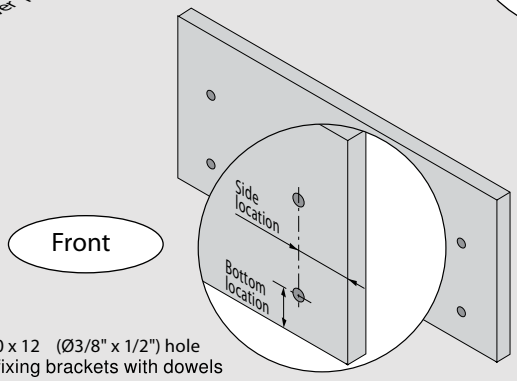

Bore Ø10 x 12 (Ø3/8" x 1/2") hole for front fixing brackets with dowels
(Determine locations from specifications below

Installation specifications

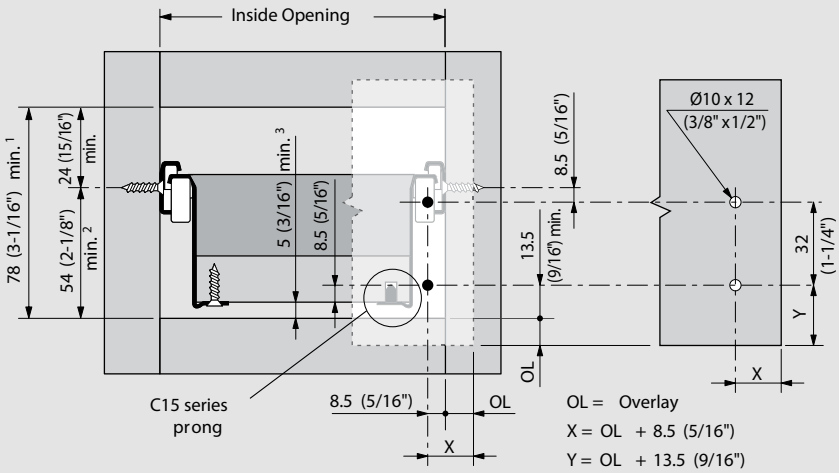

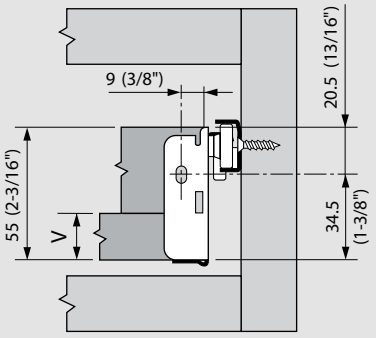

V = Variable bottom thickness minimum 13 (1/2") material

KELLEY,S CABINET SUPPLY, INC.
1019 NORTH COMBEE ROAD
LAKELAND, FL. 33801

(800) 282-3653

KELLEY.S CABINET SUPPLY, INC.
3315 SW 13 ST. UNIT #6
OCALA, FL. 34474

METABOX 320M DRAWER SERIES

Drawer components

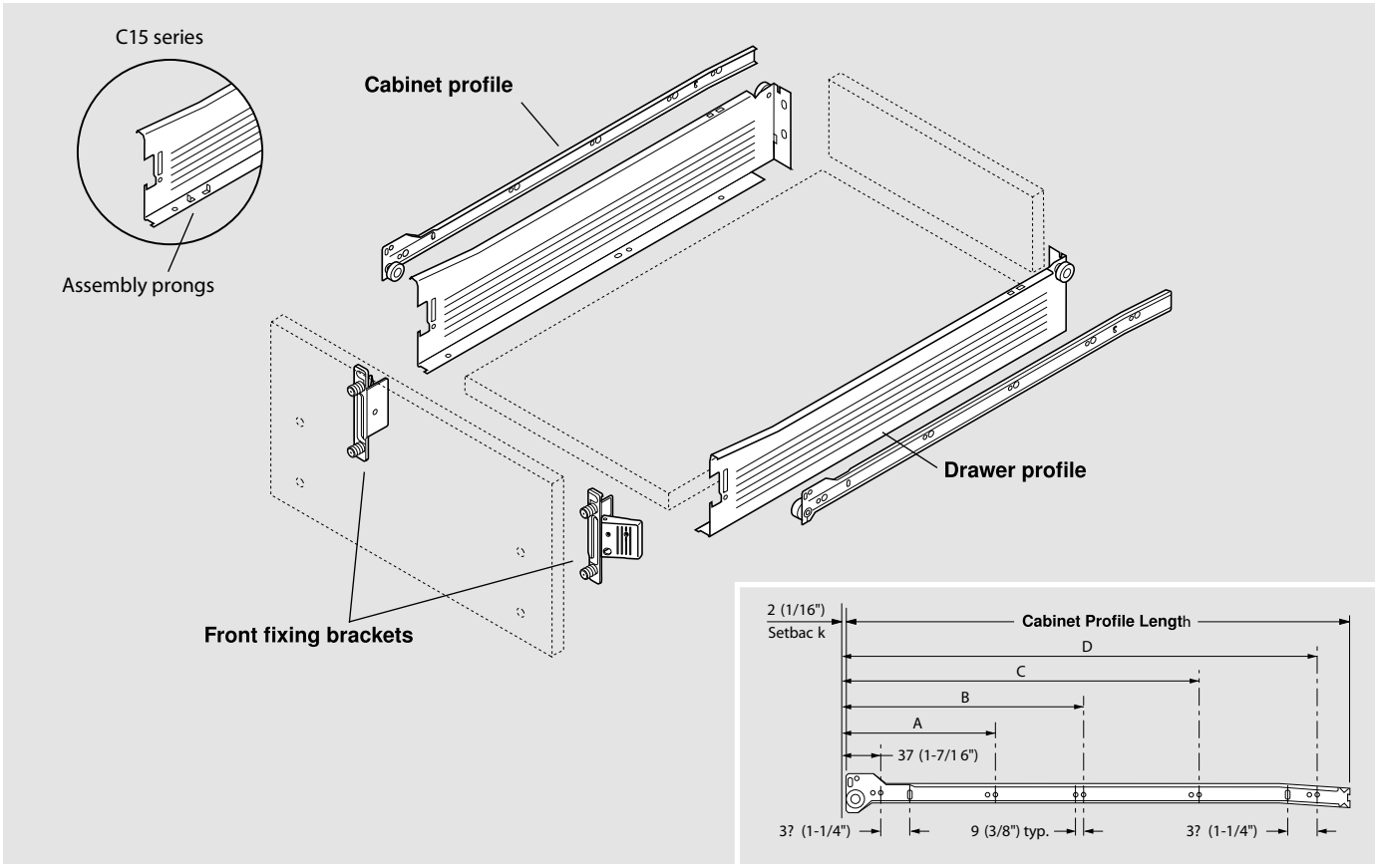

Runner sets (includes cabinet and drawer profiles)

C15 series white	Nominal Length	Min. cabinet Inside depth	Cabinet & drawer **Profile length**	System screw mounting hole positions			
				A	B	C	D
320M5500C15	(22")	557 (21-7/8")	550 (21-5/8")	165 (6-1/2")	261 (10-1/4")	389 (15-5/16")	517 (20-3/8")
320M5000C15	(20")	507 (19-15/16")	500 (19-11/16")	165 (6-1/2")	261 (10-1/4")	389 (15-5/16")	453 (17-13/16")
320M4500C15	(18")	457 (17-15/16")	450 (17-11/16")	165 (6-1/2")	261 (10-1/4")	389 (15-5/16")	-
320M4000C15	(16")	407 (16")	400 (15-3/4")	165 (6-1/2")	261 (10-1/4")	357 (14-1/16")	-
320M3500C15	(14")	357 (14")	350 (13-3/4")	165 (6-1/2")	261 (10-1/4")	325 (12-13/16")	-
320M2700C15	(11")	277 (10-7/8")	270 (10-5/8")	229 (9")	-	-	-

Standard front fixing bracket

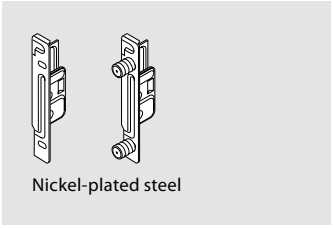

Nickel-plated steel

Screw-on	ZSF.1700	Right
	ZSF.1700	Left
Press-in	ZSF.1800	Right
	ZSF.1800	Left

Nylon in white*

ZAA.3500 Cover cap

Clip-on front fixing bracket

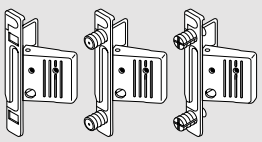

Nickel-plated steel

Screw-on	ZSF.1 ?00	Right
	ZSF.1 ?00	Left
Press-in	ZSF.1300	Right
	ZSF.1300	Left
Expando	ZSF.130E	Right
	ZSF.130E	Left

Nylon in white*

ZAA.3700 Cover cap

KELLEY,S CABINET SUPPLY, INC.
1019 NORTH COMBEE ROAD
LAKELAND, FL. 33801

(800) 282-3653

KELLEY.S CABINET SUPPLY, INC.
3315 SW 13 ST. UNIT #6
OCALA, FL. 34474

METABOX 320M DRAWER SERIES

Drawer components

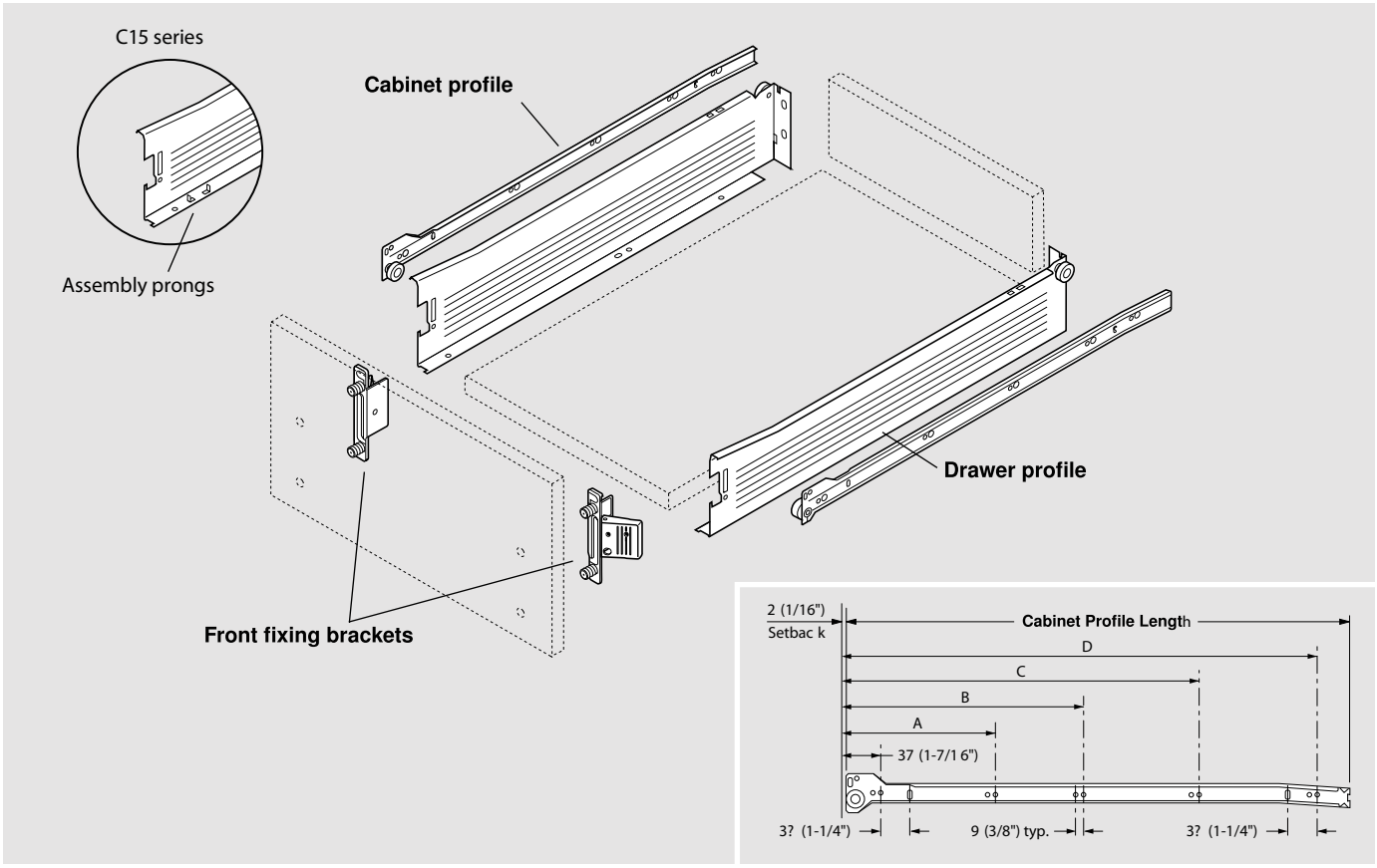

Runner sets (includes cabinet and drawer profiles)

C15 series white	Nominal Length	Min. cabinet Inside depth	Cabinet & drawer **Profile length**	System screw mounting hole positions			
				A	B	C	D
320M5500C15	(22")	557 (21-7/8")	550 (21-5/8")	165 (6-1/2")	261 (10-1/4")	389 (15-5/16")	517 (20-3/8")
320M5000C15	(20")	507 (19-15/16")	500 (19-11/16")	165 (6-1/2")	261 (10-1/4")	389 (15-5/16")	453 (17-13/16")
320M4500C15	(18")	457 (17-15/16")	450 (17-11/16")	165 (6-1/2")	261 (10-1/4")	389 (15-5/16")	-
320M4000C15	(16")	407 (16")	400 (15-3/4")	165 (6-1/2")	261 (10-1/4")	357 (14-1/16")	-
320M3500C15	(14")	357 (14")	350 (13-3/4")	165 (6-1/2")	261 (10-1/4")	325 (12-13/16")	-
320M2700C15	(11")	277 (10-7/8")	270 (10-5/8")	229 (9")	-	-	-

Standard front fixing bracket

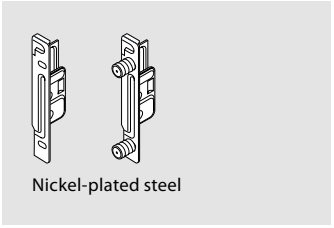

Nickel-plated steel

Screw-on	ZSF.1700	Right
	ZSF.1700	Left
Press-in	ZSF.1800	Right
	ZSF.1800	Left

Nylon in white*

ZAA.3500 Cover cap

Clip-on front fixing bracket

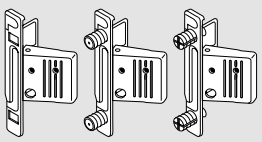

Nickel-plated steel

Screw-on	ZSF.1 ?00	Right
	ZSF.1 ?00	Left
Press-in	ZSF.1300	Right
	ZSF.1300	Left
Expando	ZSF.130E	Right
	ZSF.130E	Left

Nylon in white*

ZAA.3700 Cover cap

KELLEY,S CABINET SUPPLY, INC.
1019 NORTH COMBEE ROAD
LAKELAND, FL. 33801

(800) 282-3653

KELLEY.S CABINET SUPPLY, INC.
3315 SW 13 ST. UNIT #6
OCALA, FL. 34474

METABOX 320H DRAWER SERIES

Drawer components

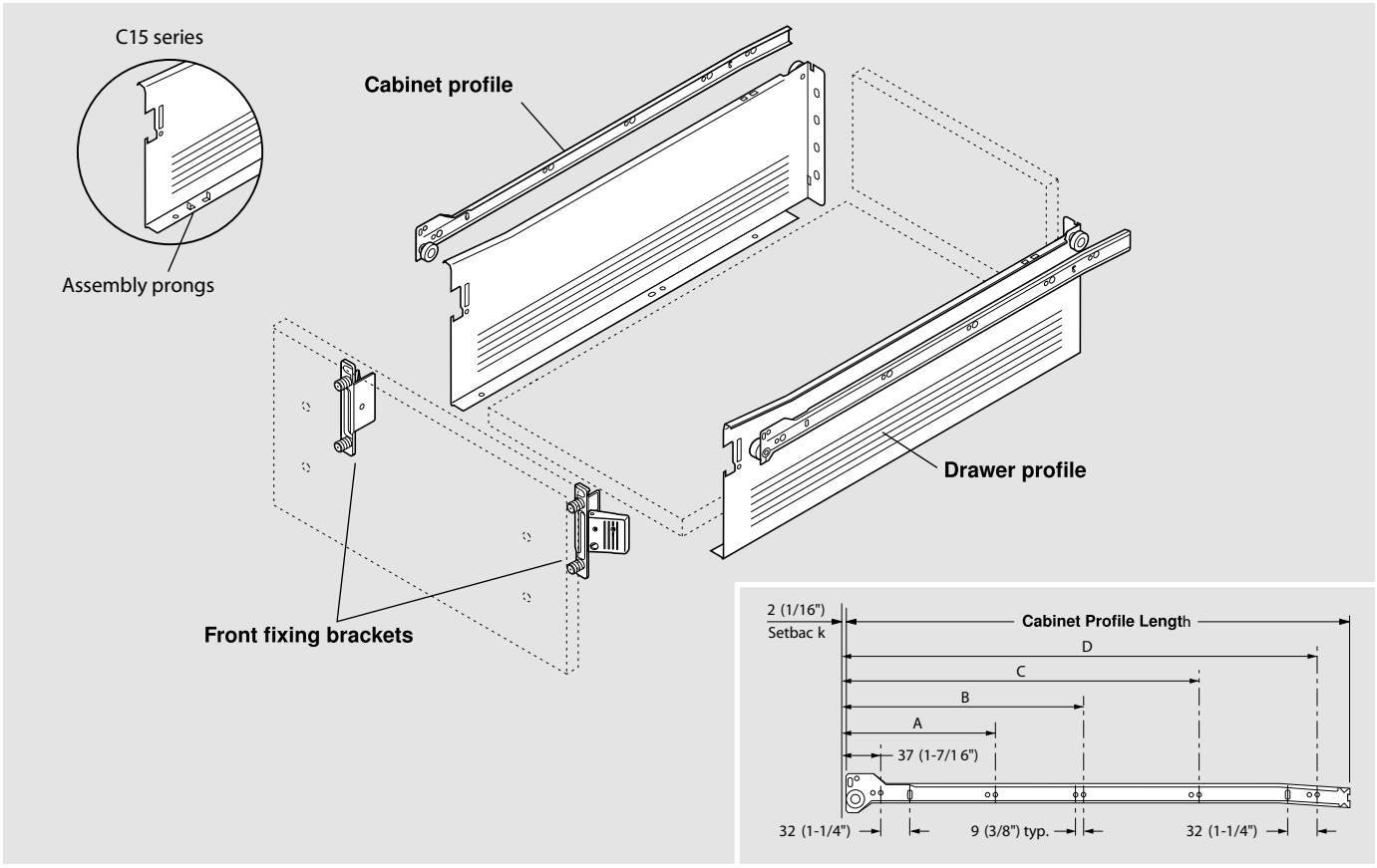

Runner sets (includes cabinet and drawer profiles)

C15 series white	Nominal Length	Min. cabinet Inside depth	Cabinet & drawer **Profile length**	System screw mounting hole positions			
				A	B	C	D
320H5500C15	(22")	557 (21-7/8")	550 (21-5/8")	165 (6-1/2")	261 (10-1/4")	389 (15-5/16")	517 (20-3/8")
320H5000C15	(20")	507 (19-15/16")	500 (19-11/16")	165 (6-1/2")	261 (10-1/4")	389 (15-5/16")	453 (17-13/16")
320H4500C15	(18")	457 (17-15/16")	450 (17-11/16")	165 (6-1/2")	261 (10-1/4")	389 (15-5/16")	-
320H4000C15	(16")	407 (16")	400 (15-3/4")	165 (6-1/2")	261 (10-1/4")	357 (14-1/16")	-
320H3500C15	(14")	357 (14")	350 (13-3/4")	165 (6-1/2")	261 (10-1/4")	325 (12-13/16")	-

Standard front fixing bracket

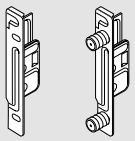

Nickel-plated steel

Screw-on	ZSF.1700	Right
	ZSF.1700	Left
Press-in	ZSF.1800	Right
	ZSF.1800	Left

Nylon in white*

ZAA.3500 Cover cap

Clip-on front fixing bracket

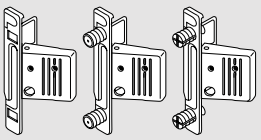

Nickel-plated steel

Screw-on	ZSF.1200	Right
	ZSF.1200	Left
Press-in	ZSF.1300	Right
	ZSF.1300	Left
Expando	ZSF.130E	Right
	ZSF.130E	Left

Nylon in white*

ZAA.3700 Cover cap

KELLEY,S CABINET SUPPLY, INC.
1019 NORTH COMBEE ROAD
LAKELAND, FL. 33801

(800) 282-3653

KELLEY.S CABINET SUPPLY, INC.
3315 SW 13 ST. UNIT #6
OCALA, FL. 34474

METABOX 320H SPCIFICATIONS

Component specifications

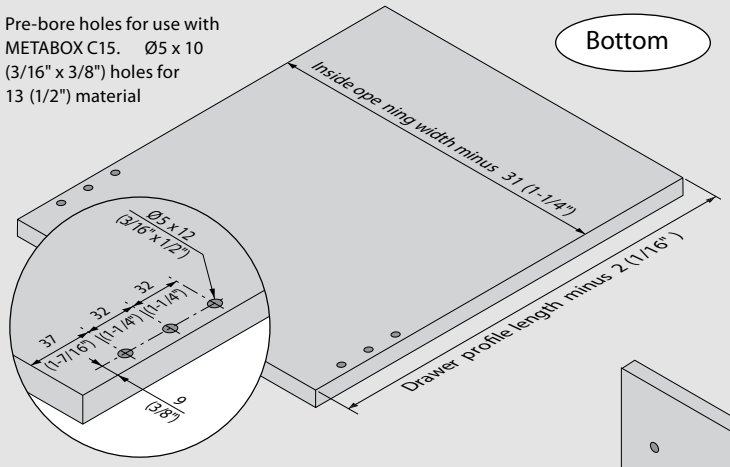

Profile length	Bottom length
550 (21-5/8")	548 (21-9/16")
500 (19-11/16")	498 (19-5/8")
450 (17-11/16")	448 (17-5/8")
400 (15-3/4")	398 (15-11/16")
350 (13-3/4")	348 (13-11/16")

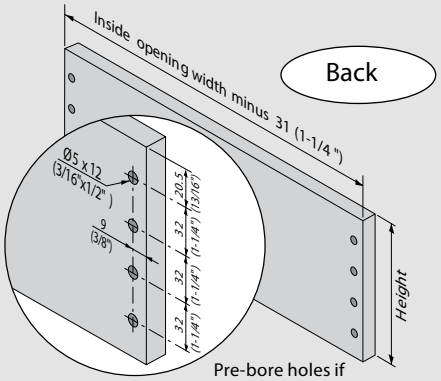

Pre-bore holes if using system screws

Material thickness	Back height
13 (1/2")	138 (5-7/16")
16 (5/8")	135 (5-5/16")
19 (3/4")	132 (5-3/16")

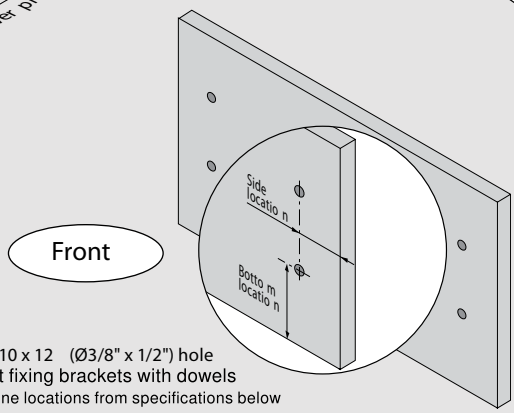

Bore Ø10 x 12 (Ø3/8" x 1/2") hole for front fixing brackets with dowels
(Determine locations from specifications below

Installation specifications

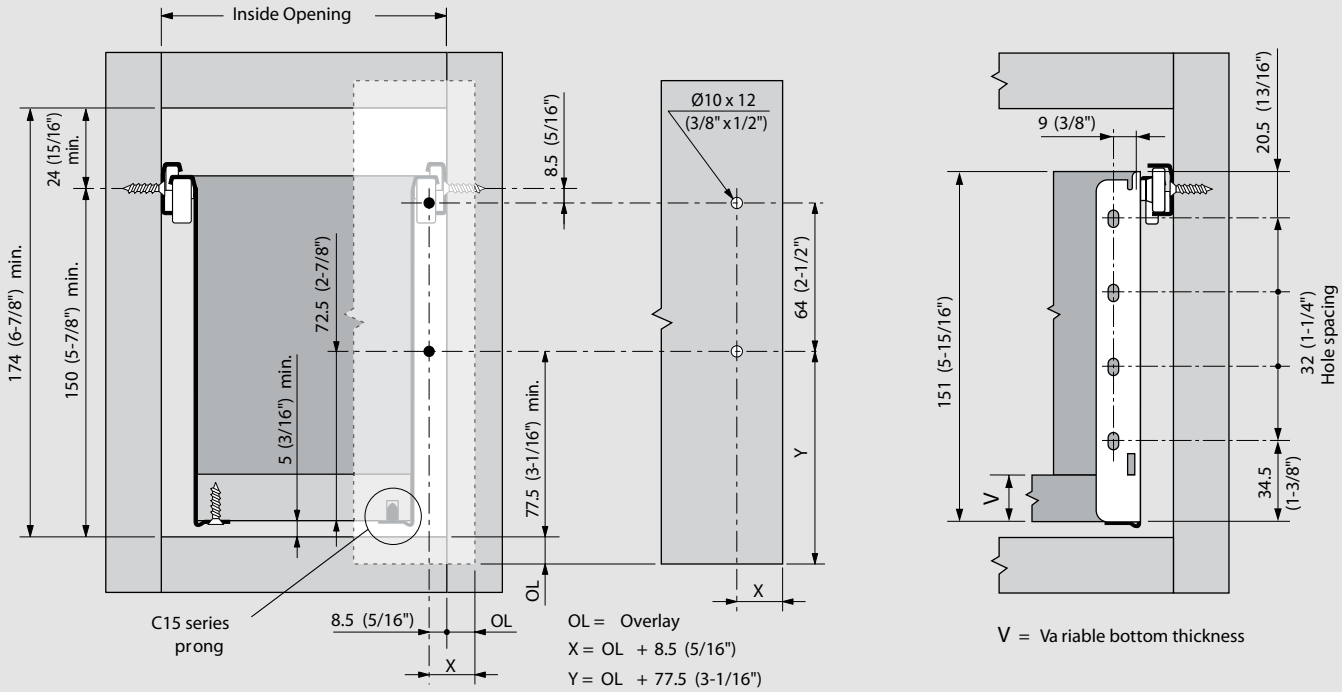

OL = Overlay
X = OL + 8.5 (5/16")
Y = OL + 77.5 (3-1/16")

V = Va riable bottom thickness

KELLEY,S CABINET SUPPLY, INC.
1019 NORTH COMBEE ROAD
LAKELAND, FL. 33801

(800) 282-3653

KELLEY.S CABINET SUPPLY, INC.
3315 SW 13 ST. UNIT #6
OCALA, FL. 34474

METABOX GALLERY RAIL & BOXSIDE

Gallery components

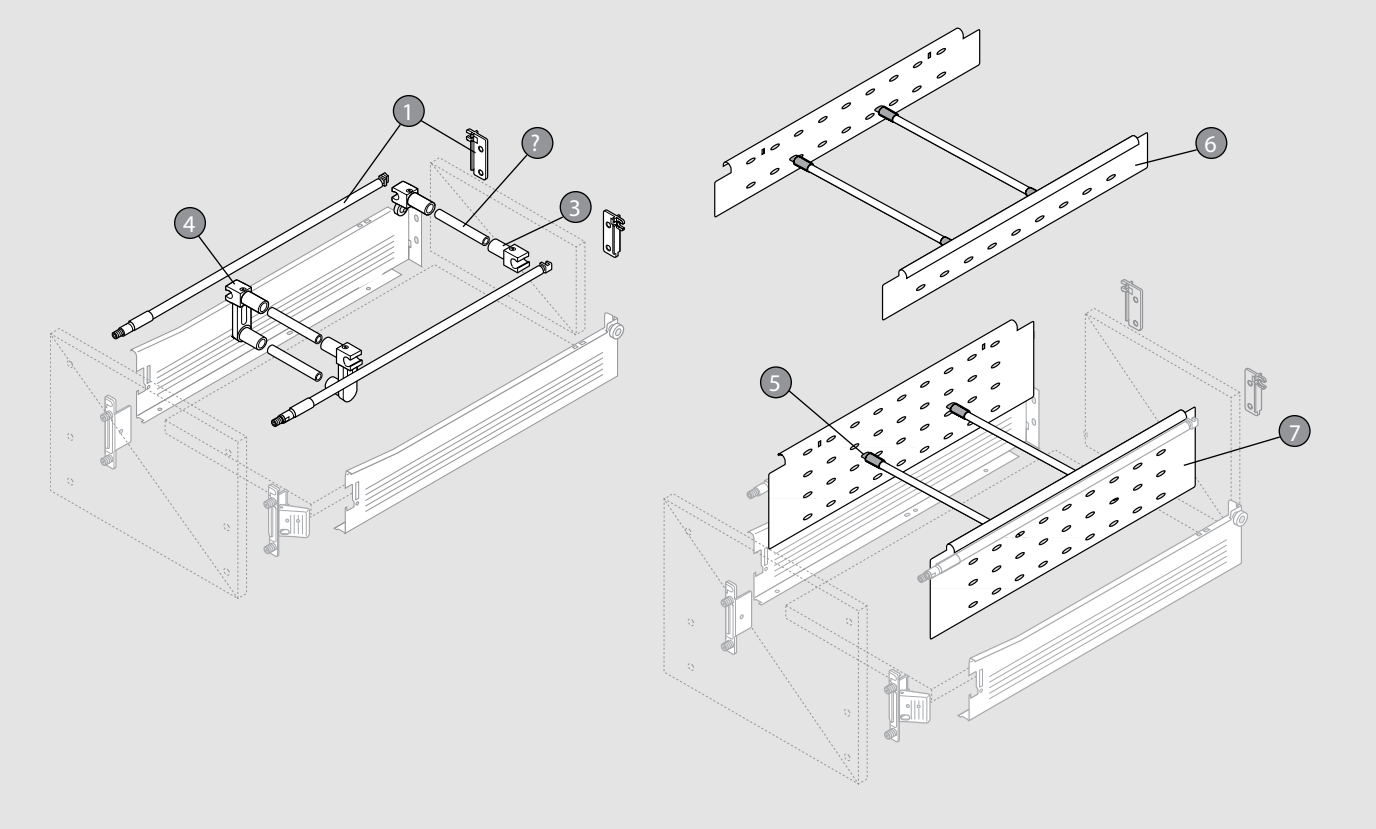

INSERTA gallery set

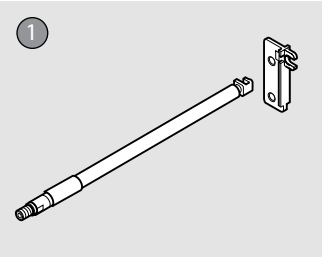

Includes 2 adjustable rails
2 rear fixing brackets
Colors: cream or white

ZRE.321S.ID	350 (14") drawer length
ZRE.371S.ID	400 (16") drawer length
ZRE.421S.ID	450 (18") drawer length
ZRE.471S.ID	500 (20") drawer length
ZRE.521S.ID	550 (22") drawer length

Gallery cross rail

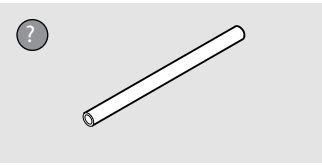

1104 (44") long, cut to length
Colors: cream or white

Length = inside opening width minus 60 (2-3/8")

ZRG.1104U	gallery cross rail

Gallery connectors

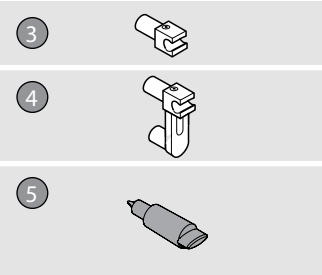

ZRU.00E0.01	Single gallery connector Colors: cream or white
ZRU.00Z0.01	Double gallery connector Colors: cream or white
ZRU.10B1E	Spring connector Colors: dust gray

BOXSIDE

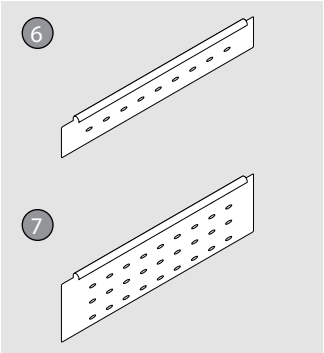

M (64mm high) Color: white

Z36M367SE01	400 (16") drawer length
Z36M417SE01	450 (18") drawer length
Z36M467SE01	500 (20") drawer length
Z36M517SE01	550 (22") drawer length

H (128mm high) Color: white

Z36H367SE01	400 (16") drawer length
Z36H417SE01	450 (18") drawer length
Z36H467SE01	500 (20") drawer length
Z36H517SE01	550 (22") drawer length

KELLEY,S CABINET SUPPLY, INC.
1019 NORTH COMBEE ROAD
LAKELAND, FL. 33801

(800) 282-3653

KELLEY.S CABINET SUPPLY, INC.
3315 SW 13 ST. UNIT #6
OCALA, FL. 34474

METABOX METAFILE SYSTEM

Hanging rail accessories

METAFILE set
Includes components to make one standard hanging file system

Includes:

1 (2) steel hanging rails (ZRM.550S)
zinc coated, 3 x 13 x 550

2 (4) rail support brackets (ZRM.0005.10)
synthetic, natural color

3 (4) rail support covers (ZRM.0003.10)
synthetic, cream or white

4 (2) **glide profiles** (ZRM.550G)
synthetic, cream or white, 550 length

5 **(8) flathead wood screws** (6064N)
nickel, #6 x 3/4"

ZRM.5500.US METAFILE set

Lateral file accessories

6 ZRM.0004.10 Lateral bracket
synthetic, cream or white,
4 required per drawer

7 ZRM.1100S Steel hanging rail
zinc coated, 3 x 13 x 1100
cut to length

8 ZRM.1100G Glide profile
synthetic, cream or white,
1100mm long, cut to length

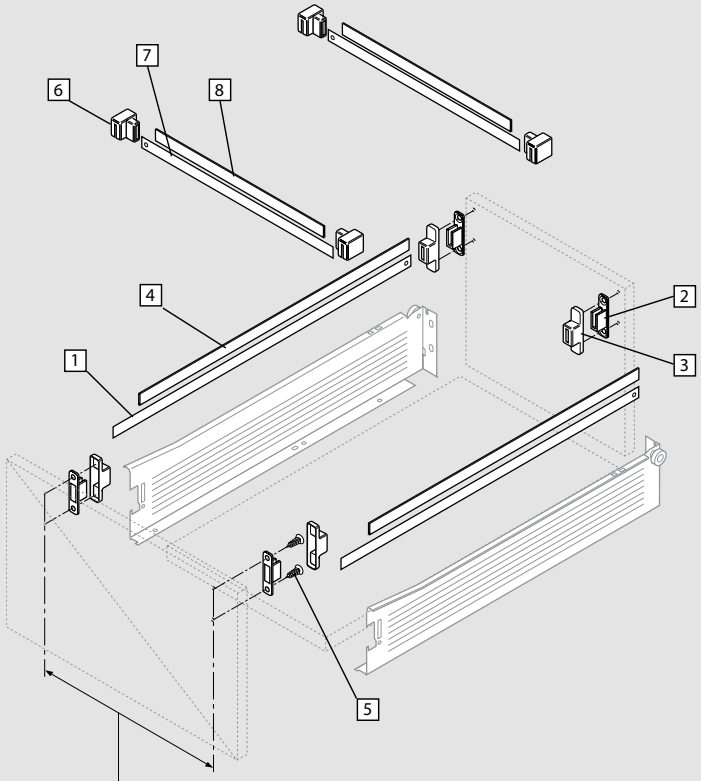

Assembly and installation specifications

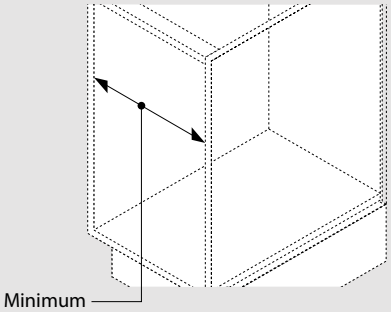

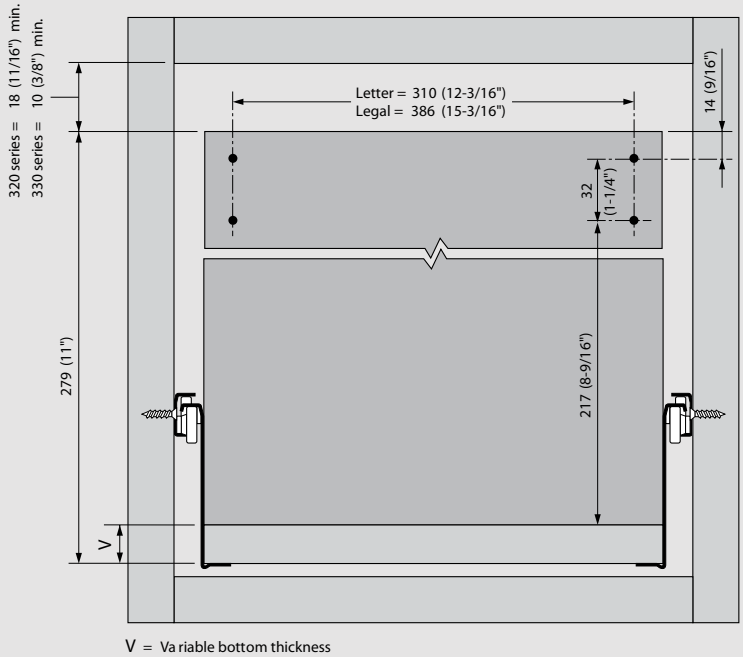

V = Variable bottom thickness

KELLEY,S CABINET SUPPLY, INC.
1019 NORTH COMBEE ROAD
LAKELAND, FL. 33801

(800) 282-3653

KELLEY.S CABINET SUPPLY, INC.
3315 SW 13 ST. UNIT #6
OCALA, FL. 34474

SOLO 262H CONCEALED DRAWER RUNNER

Single extension runner system

- For use in frame cabinets.
- For 5/8" maximum drawer side thickness.
- Cream color, epoxy-coated steel profiles.
- Force guided right side and +/- 1/16" tolerance compensating left side.
- Self-closing action on all profiles.
- Positive lift-over stop for drawer removal.
- 34 kg (75 lb.) Dynamic weight capacity. 45 kg (100 lb.) Static weight capacity.

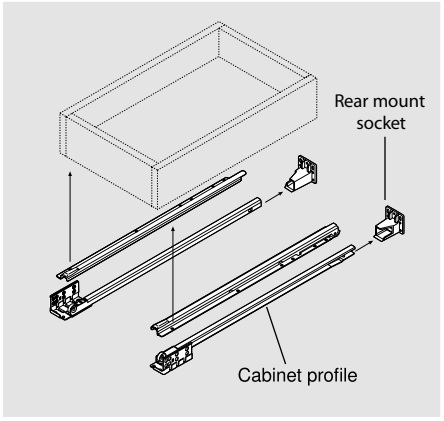

Overlay applications

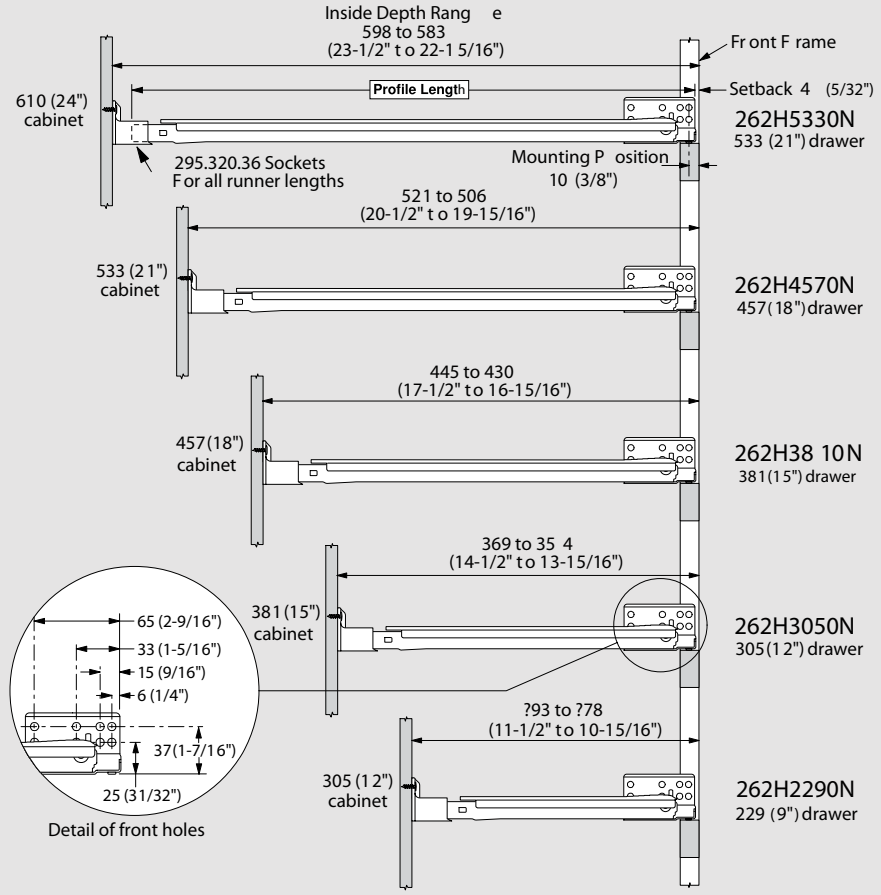

Inset applications

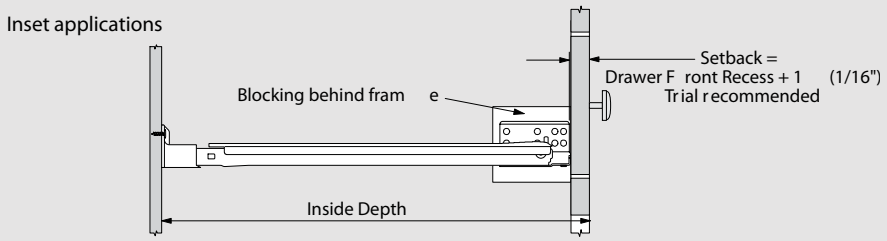

Runner Part No.	Cabinet Depth	Inside Depth Maximum	Inside Depth Minimum	Drawer Length	Drawer Thk.	Extension Loss	**Cabinet Profile** Length
262H5330N	610 (24")	598 (23-9/16")	583 (22-15/16")	533 (21")	16 (5/8") max.	116 (4-9/16")	571 (22-1/2")
262H4570N	533 (21")	521 (20-9/16")	506 (19-15/16")	457 (18")		106 (4-3/16")	494 (19-1/2")
262H3810N	457 (18")	445 (17-9/16")	430 (16-15/16")	381 (15")		96 (3-3/4")	418 (16-1/2")
262H3050N	381 (15")	369 (14-9/16")	354 (13-15/16")	305 (12")		86 (3-3/8")	342 (13-1/2")
262H2290N	305 (12")	293 (11-9/16")	278 (10-15/16")	229 (9")		74 (2-15/16")	266 (10-1/2")
Inset application runners							
262H5330N05	610 (24")	Variable based on application Trial recommended		533 (21")		Variable based on application	553 (21-3/4")
262H4570N05	533 (21")			457 (18")			476 (18-3/4")

Installation components

295.3 20.36	Rear mount socket	606N	#6 x 5/8" Flat head screw	707N	#7 x 5/8" Flat head screw
612TH	#6 x 1/2" Truss head screw	6064N	#6 x 3/4" Flat head screw		

KELLEY,S CABINET SUPPLY, INC.
1019 NORTH COMBEE ROAD
LAKELAND, FL. 33801

(800) 282-3653

KELLEY.S CABINET SUPPLY, INC.
3315 SW 13 ST. UNIT #6
OCALA, FL. 34474

SOLO 262H SPECIFICATIONS

Drawer and cabinet specifications

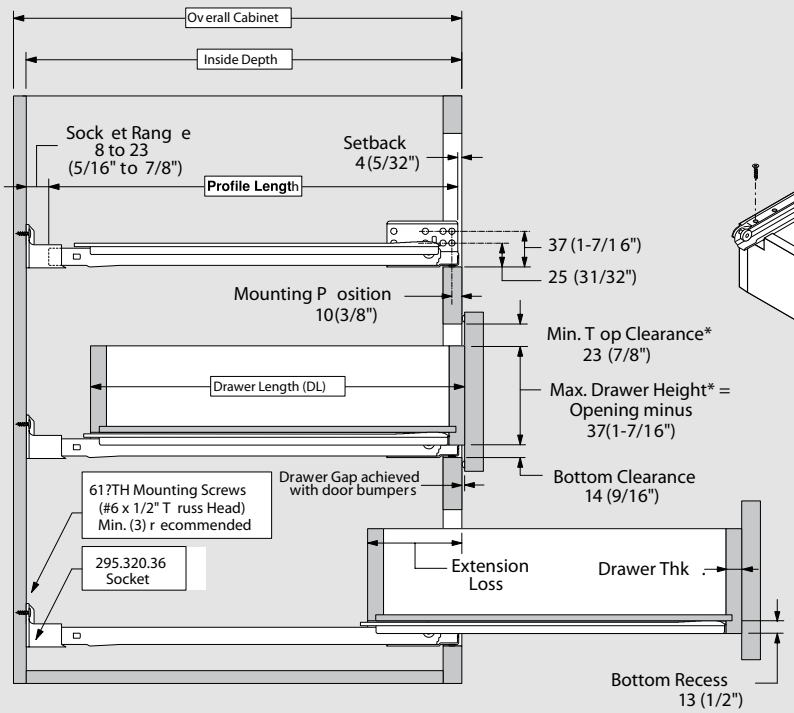

Drawer shown ready for SOLO drawer profiles

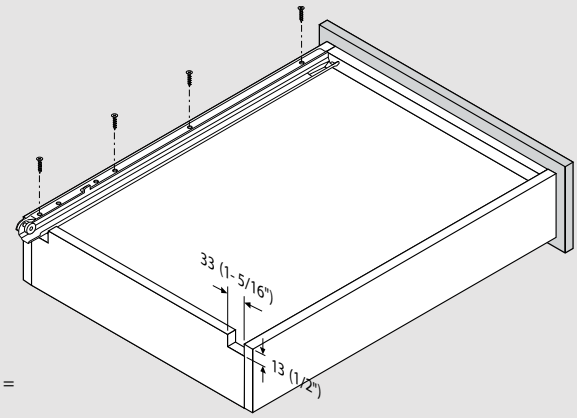

Drawer size and position in opening

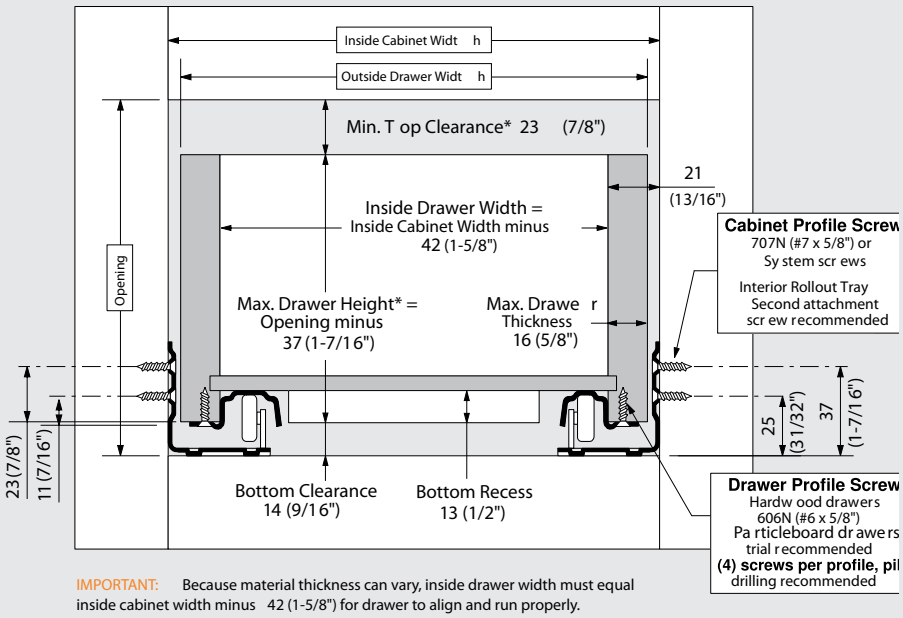

IMPORTANT: Because material thickness can vary, inside drawer width must equal inside cabinet width minus 42 (1-5/8") for drawer to align and run properly.

Rear mount socket position

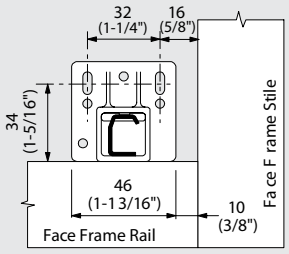

Calculating outside drawer width

For drawer thickness	16 (5/8")	14 (9/16")	13 (1/2")
Deduct from inside cabinet width	10 (3/8")	14 (9/16")	16 (5/8")

* Max. Drawer Height and Min. Top Clearance are based on ability to remove drawer straight and without tilting. Smaller top clearances can be achieved with a shorter drawer or if drawer tilting is acceptable. Trial is recommended.

KELLEY,S CABINET SUPPLY, INC.
1019 NORTH COMBEE ROAD
LAKELAND, FL. 33801

(800) 282-3653

KELLEY.S CABINET SUPPLY, INC.
3315 SW 13 ST. UNIT #6
OCALA, FL. 34474